G. W. Sauermann
December 25, 1945

STRUCTURAL FRAMEWORKS

CLYDE T. MORRIS, C.E.
PROFESSOR OF CIVIL ENGINEERING
OHIO STATE UNIVERSITY

SAMUEL T. CARPENTER, B.C.E., M.Sc.
ASSOCIATE PROFESSOR OF CIVIL ENGINEERING
SWARTHMORE COLLEGE

NEW YORK • JOHN WILEY & SONS, Inc.
LONDON • CHAPMAN & HALL, Ltd.

THIS BOOK HAS BEEN MANUFACTURED IN ACCORDANCE WITH THE RECOMMENDATIONS OF THE WAR PRODUCTION BOARD IN THE INTEREST OF THE CONSERVATION OF PAPER AND OTHER IMPORTANT WAR MATERIALS.

COPYRIGHT, 1943
BY CLYDE T. MORRIS
AND SAMUEL T. CARPENTER

All Rights Reserved

This book or any part thereof must not be reproduced in any form without the written permission of the publisher.

PRINTED IN THE UNITED STATES OF AMERICA

PREFACE

It is not the purpose of the authors to present the usual methods of design of simple structures which have been adequately treated in many textbooks, but to attempt to analyze some of the more complex problems which arise in the design of buildings and structural frameworks. Many of these complexities are due to interaction of the many members of the structural frame and to the effects of deformations frequently neglected in analyses.

It is probable that many present-day methods of stress analysis and design are more accurate than our knowledge of the actual forces which our structures may be called upon to withstand. Especially is this true of buildings the nature of whose contents and uses cannot be predicted with accuracy. Also wind forces and earthquake forces are highly indeterminate. It is our purpose to indicate permissible simplifications in methods of calculation which are in accord with the elastic action of the structures and which give results of sufficient accuracy.

Numerous examples, worked out in sufficient detail to illustrate the methods, are presented to assist the designer in setting up his particular problems. A previous knowledge of the usual methods of analysis and design of simple structures is presumed as well as a knowledge of the mechanics and strength of materials.

Much of the material in this textbook has been used in courses of lectures given to senior and graduate students in civil and architectural engineering at the Ohio State University and at Swarthmore College. Chapter IX, "Radio and Transmission Towers," gives methods of calculation for both free standing and guyed towers and for transmission towers in bending and in torsion. Chapters X and XI, "Industrial Buildings" and "Welded Design," are the results of recent experience in the design of modern industrial plants.

Where applicable, free use has been made of methods which have appeared in various technical publications, acknowledgment of authorship being made in the text or in footnotes with references to sources. Special acknowledgment is due the Bethlehem Steel Company for permission to publish their welding design charts and for other assistance, the Austin Company and the International Stacey Corporation for photographs, and the American Institute of Steel Construction and the

American Welding Society. Much has also been gained by a study of the publications of the Lincoln Electric Company.

It is hoped that the book will prove useful as a textbook in advanced courses in the design of structural frameworks as well as a reference book for engineers and designers.

CLYDE T. MORRIS
SAMUEL T. CARPENTER

May, 1943

CONTENTS

CHAPTERS PAGE

I. Loads 1

1. Live Load. 2. Floor Loads. 3. Roof Loads. 4. Live Load to Columns. 5. Dead Loads. 6. Wind Loads. 7. Earthquake Effects.

II. Fireproof Floors 9

8. Early Types. 9. Hollow Tile Arches. 10. Reinforced Concrete Slabs. 11. Combination Slabs. 12. Two-Way Slabs. 13. Girders for Two-Way Slabs. 14. Two-Way Combination Slabs. 15. Bar Joists. 16. Girderless Floors. 17. Concentrated Loads on Slabs.

III. Beams and Girders 26

18. Simple Beams. 19. Web Stresses. 20. Composite Beams. 21. Floor Framing Layouts. 22. Deflections. 23. Continuity.

IV. Deflections 34

24. Deflection of Trusses. 25. Deflection of Girders. 26. Deflection Calculations. 27. Girders with Variable Cross Section.

V. Columns 39

28. The Ideal Column. 29. Eccentrically Loaded Columns. 30. Column Formulas. 31. End Conditions. 32. Combined Bending and Compression. 33. Eccentricities of Floor Loads. 34. Column Schedules. 35. Wall Columns.

VI. Rigid Frames under Vertical Loading 47

36. Purpose. 37. Statical Indeterminacy. 38. Internal Indeterminacy. 39. Methods of Analysis. 40. Integration of Elastic Lines. 41. Area Moments. 42. Slope Deflection. 43. Moment Distribution. 44. Moment Distribution — Side Sway. 45. Variable Moment of Inertia. 46. A Roof Frame. 47. Many-Storied Building Frames.

VII. Wind Bracing 78

48. Effective Bracing. 49. Allocation of Wind Forces to Braced Bents. 50. Types of Wind Bracing. 51. Methods of Analysis. 52. Simple Portals. 53. Continuous Frames, Portal Method. 54. The Cantilever Method. 55. Unsymmetrical Bents. 56. Knee-Braced Bent. 57. Deflections and Vibrations. 58. Elastic Requirements. 59. Portal Design. 60. Bent Deflections. 61. Cantilever Design, Spurr Method. 62. Calculations for a Tower Building. 63. Design of Lower Stories.

VIII. Asymmetry 120

64. General Discussion. 65. Unsymmetrical Floor Plan. 66. Bent Stiffness. 67. Unsymmetrical Tower. 68. Floor Distortion.

IX. Radio and Transmission Towers 130

69. General Discussion. 70. Wind Pressures on Open Frameworks. 71. Free Standing Radio Towers. 72. Guyed Towers. 73. Wind Direction for Maximum Stresses. 74. Cable Sag and Deflections. 75. A Guyed Tower. 76. Stresses in the Mast. 77. Towers Guyed at Two Levels. 78. Transmission Towers, The Cables. 79. Transmission Tower Loads. 80. Torsional Stresses.

X. Industrial Buildings 162

81. General Plan. 82. Framing Types. 83. Bracing Systems. 84. Design Problem. 85. Crane Runway. 86. Design of Crane Columns. 87. Roof Columns. Wind Load. 88. Roof Columns. Crane Thrust. 89. Design of Roof Columns. 90. Design of Roof Trusses 91. Structural Details.

XI. Welded Design 200

92. Types of Welds. 93. Minimum Welds. 94. Economy in Welding. 95. Welds Resisting Parallel Shear. 96. End Welds. 97. Welded Connections Subjected to Shear and Bending. 98. Combined Direct Shear and Torsional Shear. 99. Seat Angle Design. 100. Design of Stiffened Seats. 101. Continuity in Welded Frames. 102. Semi-rigid Connections. 103. Restraint with Top and Bottom Angles. 104. Theory of Semi-rigid Connected Frames. 105. Plate Girders. 106. Butt Welds. 107. Fatigue of Welded Joints. 108. Welding Symbols. 109. Column Splices and Details.

XII. Column Bases and Foundations 252

110. General. 111. Exploration of Foundation Site. 112. Safe Bearing Loads. 113. Settlement. 114. Proportioning Footing Areas. 115. Column Bases. 116. Grillage Foundations. 117. Combined Footings.

Index 267

CHAPTER I

LOADS

1. Live Load. The primary purpose of a building is to contain and shelter live loads. By live load is meant any load which is not permanently fixed as a part of the building, such as office furniture, safes, filing cases, and other fixtures, as well as the actual weight of the people using the building.

The amount of live load for which to design a structure depends of course upon the use to which it is to be put, and in buildings it is often difficult to predict the nature of the contents a few years in the future. Also different parts of the same structure should be designed for different unit live loads, depending upon their location and the probability of their ever receiving the full amount of live load which would be theoretically possible.

2. Floor Loads. The floor slabs and beams should be designed for the maximum probable concentrated live load, such as a piano or heavy piece of furniture in a dwelling, and an office safe or heavy piece of machinery in an office building. It is not usually considered probable that a floor beam will receive the load from more than one of these heavy concentrations at one time.

The actual weight of the ordinary furniture in a dwelling or apartment usually averages less than 10 lb per sq ft and rarely exceeds 15 lb. In offices, the average may be about 12 or 15 lb per sq ft, with a maximum in a very few offices of 60 to 75 lb per sq ft.*

The corridors, stairs, and places where crowds of people may assemble should be designed for much heavier loads. In experiments,† by selecting tall men, weights of crowds have been secured as high as 183 lb per sq ft on the floor, and with 122 lb per sq ft " a man could elbow his way

* See *Report of Building Code Committee,* U. S. Department of Commerce.
Eng. News-Record, March 29, 1923, p. 584.
Am. Architect, Aug. 26, 1893.
† *Eng. News,* Vol. 51, p. 360.
Eng. News, Vol. 53, p. 341.
Trans. Am. Soc. Civil Engrs., Vol. 54, p. 441.
" Floor Load Requirements," by R. Fleming, *Eng. News-Record,* Vol. 80, p. 1227.
" Structural Design of Buildings," by C. C. Schneider, *Trans. Am. Soc. Civil Engrs.,* Vol. 54, p. 371.

through it only with perseverance and determined effort." These loads were obtained with selected tall men. Probably a mixed crowd would seldom exceed 100 lb per sq ft, and that only for limited areas.

For stores, warehouses, and manufacturing buildings, the live load must be taken in accordance with the purpose for which the building is designed. In warehouses and rooms for storage purposes it is well to have the safe live load capacity conspicuously posted.

3. Roof Loads. Flat roofs of office buildings, apartments, hotels, etc., which can be loaded with crowds of people, should be treated as floors, but it usually is not considered probable that the maximum live load of people would occur at the same time as the maximum snow load. If the roof is safe for a crowd of people weighing 40 to 50 lb per sq ft, the snow load usually may be neglected.

The snow load will vary with the locality and with the slope of the roof. Mr. C. C. Schneider, in his *General Specifications for the Structural Work of Buildings,* gives the following:

> A snow load per horizontal square foot of roof, of 25 lbs. for all slopes up to 20°; this load to be reduced 1 lb. for every degree of increase in slope up to 45°, above which no snow is to be considered.

Mr. Chas. Evan Fowler, in his *General Specifications for Steel Roofs and Buildings,* gives a table for snow loads in various parts of the United States and for various slopes of roof. The original table assigns no snow load to roofs of 45° slope or steeper, and none to the Southern States or the Pacific Slope. Severe sleet storms have been known as far south as Florida, which would put an ice coating on a vertical wall nearly an inch thick. The table below has therefore been modified from Fowler, by using a minimum load of 5 lb per sq ft of surface.

Snow Loads

Location	Slope of Roof				
	45°	35°	25°	20°	15°
Southern States and Pacific Slope	5	5	5	5	5
Central States	5	8	15	22	30
Rocky Mountain States	5	10	18	26	35
New England States	5	12	20	33	45
Northwest States	5	14	25	37	50

4. Live Load to Columns. It is not considered probable that all the floors of a building, not built for storage or manufacturing purposes will be loaded to their maximum capacity at the same time, and for that

reason it is usual to reduce the live loads assumed to be carried by the columns to a value below that for which the floors are designed.*

A common practice is to design the columns for the full live load of the roof and top floor, to reduce the live load going to the columns from the other floors 5% for each floor, proceeding downward until 50% of the specified floor load is reached, and to use 50% for each of the remaining floors. Some codes use the same rule except that 10% is used for the reduction per floor until 50% is reached. The U. S. Building Code Committee recommends an even greater reduction than is given by the above rules. This is shown in the following table.

REDUCTION OF TOTAL LIVE LOADS CARRIED

Carrying 1 floor	0%
Carrying 2 floors	10%
Carrying 3 floors	20%
Carrying 4 floors	30%
Carrying 5 floors	40%
Carrying 6 floors	45%
Carrying 7 floors or more	50%

5. Dead Loads.† The dead load in a building consists of the weight of the walls, floors, partitions, roofs, structural frame, and all other permanent construction. As this constitutes the major portion of the total load to be carried, its calculation must be made with great care. Dead load estimates are usually made from design drawings, and subsequent changes in details, deflection of forms, and inaccuracies in construction may increase the dead load beyond the original estimate. Especially is this true of the floors and fireproofing in multi-storied buildings.‡

The design of the structure must begin, logically, with that part which supports the live load directly, the floor and roof slabs, and proceed along the path of the stresses to the foundations, which are the last parts to be designed. Thus, the design begins with the roof, and proceeds through the floors and columns to the footings.

The dead load must be calculated as the design progresses, and the dead load for each part must be checked and corrected, if necessary, after the design of it is completed.

Tables of weights of building materials are to be found in various handbooks. The interior partitions of an office building are usually

* See "Minimum Live Loads Allowable for Use in Design of Buildings," *Report of Building Code Committee*, U. S. Department of Commerce, Washington, D. C.

† See "Dead Loads of Tier Buildings," by Robins Fleming, *Eng. News-Record*, Vol. 99, 1927, p. 470.

‡ See discussion in *J. Am. Concrete Institute*, September-October, 1937, p. 498.

capable of being moved, and it is customary to add about 10 lb per sq ft of floor to the dead load, to cover the weight of these partitions.

6. Wind Loads.* A study of the wind velocities recorded by the U. S. Weather Bureau indicates a wide distribution over the country of high wind occurrence, and there seems to be no adequate reason for exempting any locality on the North American Continent from the probability of sometime experiencing indicated wind velocities of 100 miles per hour or more.

The wind velocities published by the U. S. Weather Bureau are average velocities over a 5-min period, indicated on the standard four-cup Robinson anemometer. Studies of these instruments at the Weather Bureau† have shown that these indicated velocities are too high, the error ranging up to 24% for indicated velocities of 100 miles per hour.

The wind pressure to be used in the design of buildings must not only take into account these average velocities over 5-min periods, but also must provide for gust velocities which may exist for only a fraction of that period. Observations by the U. S. Weather Bureau show gust velocities 17 to 50% in excess of the maximum one-mile corrected velocity.‡

Eliminating several records which were obtained on the summit of Mt. Washington, N. H. (elev. 5500 ft), as representing conditions which are not applicable to the vicinity of large cities, the highest velocity in the records of the U. S. Weather Bureau is 128 miles per hour, which was secured at Miami Beach, Fla., Sept. 18, 1926. When this is corrected for instrument error and gust effect, it gives a maximum wind pressure of about 58 lb per sq ft.

Most of the anemometers of the U. S. Weather Bureau are located relatively close to the ground, and the question at once arises as to how much greater velocities may be experienced at elevations of 1000 or 1500 ft. In this connection it also must be borne in mind that in the congested districts of large cities where excessively high buildings are

* See "First Progress Report," Committee on Wind Bracing in Steel Buildings, *Civil Eng.*, March, 1931, p. 478.

"Wind Formulas and Their Experimental Basis," by Robins Fleming, *Eng. News*, Jan. 28, 1915, p. 160.

"Model Tests of Wind Pressures on High Buildings," *Eng. News-Record*, Vol. 95, 1925, p. 1063.

"Wind Pressures on Structures," by Hugh L. Dryden and Geo. C. Hill, *Scientific Papers of the Bureau of Standards*, No. 523.

† *Monthly Weather Rev.*, April, 1924.

‡ *Eng. News-Record*, December 9, 1926, p. 948.

"High Wind on Mt. Washington," *Eng. News-Record*, May 10, 1934.

usually located, the general elevation of the roofs of the surrounding buildings may be as much as 200 or 300 ft above the ground.

Another method of evaluating high wind pressures is to calculate the forces which must have been equaled or exceeded in order to produce certain observed damages. This method was applied by Mr. Julius Baier* to the results of the St. Louis tornado of May 27, 1896, and it was also applied to the damages wrought by the Florida hurricane of 1926.† These studies indicate that the average intensity of the pressure increases as the area of exposure decreases. In the St. Louis tornado, the pressure necessary to overturn a brick stack must have equaled 85 lb per sq ft, whereas it was necessary to have a pressure of only 20 lb per sq ft to cause the observed damages to a large grain elevator.

After consideration of all the factors, the Committee on Wind Bracing of the American Society of Civil Engineers made the following recommendations regarding the wind forces to be used in the design of buildings.‡

(1) As a standard wind load for the United States and Canada, the Subcommittee recommends a uniformly distributed force of 20 lb per sq ft for the first 300 ft above ground level, increased above this level by 2.5 lb per sq ft for each additional 100 ft of height, no omission of wind force being permitted for the lower parts of the building by reason of alleged shelter. Special wind-force specifications should be formulated locally for areas that are definitely known to be subject to hurricanes or tornadoes.

(2) For proportioning the wind bracing of tall buildings it is not necessary to divide the wind force into pressure and suction effects, although this generally should be done for structures with rounded roofs, for mill or other buildings with large open interiors, and for walls in which large openings may occur. The effects of possible high local suction should be investigated in relation to secondary members and the attachment of roofing or siding.

(3) For plane surfaces inclined to the wind and not more than 300 ft above the ground, the external wind force may be pressure or suction, depending on the exposure and the slope. For a windward slope inclined at not more than 20° to the horizontal, a suction of 12 lb per sq ft is recommended; for slopes between 20° and 30° a suction uniformly

* *Trans. Am. Soc. Civil Engrs.*, Vol. 37, 1898, p. 221.

† "Final Report of the Committee on the Florida Hurricane," *Trans. Am. Soc. Civil Engrs.*, Vol. 95, 1931, p. 1118.

‡ See "First Progress Report," Committee on Wind Bracing, *Civil Eng.*, March, 1931, p. 478; also "Sixth Progress Report," presented Jan. 17, 1939, and the "Final Report," in *Trans. Am. Soc. Civil Engrs.*, Vol. 105, 1940, p. 1713.

diminishing from 12 lb per sq ft to zero; and for slopes between 30° and 60° a pressure increasing uniformly from zero to 9 lb per sq ft. For the leeward slope, for all inclinations in excess of zero, a suction of 9 lb per sq ft is recommended.

(4) For roofs that are rounded, or may be represented roughly by a circular arc passing through the two springings and the ridge, the wind force will depend not only upon the exposure and the ratio of rise to span of the equivalent circular arc, but also upon whether the springings are elevated above the ground or are on the ground. Where the surfaces considered are not more than 300 ft above ground level the recommended external wind force is as follows:

(*a*) On windward quarter of the roof arc, when the roof rests on elevated vertical supports, and where the rise ratio is less than 0.20, a suction of 12 lb per sq ft is recommended; and for a rise ratio varying from 0.20 to 0.60, a pressure increasing uniformly from zero to 12 lb per sq ft, or, alternatively, for rise ratios between 0.20 and 0.35, a suction varying uniformly between these limits from 12 lb per sq ft to zero is recommended. For roofs springing from the ground level a pressure, for rise ratios varying from zero to 0.60, uniformly increasing from zero to 11.4 lb per sq ft, is recommended.

(*b*) For the central half of the roof arc, where the roof rests on elevated vertical supports, with rise ratios varying from zero to 0.60, a suction uniformly varying from 11 lb per sq ft to 20 lb per sq ft is recommended; for roofs starting from ground level, a suction of 11 lb per sq ft, regardless of the rise ratio, is recommended.

(*c*) For the leeward quarter of the roof arc, for all values of the rise ratio greater than zero, a suction of 9 lb per sq ft is recommended.

(5) It is recommended that for a flat roof a normal external suction of not less than 12 lb per sq ft should be considered as applied to the entire roof surface.

(6) On walls parallel to the wind it is recommended that an external suction of 9 lb per sq ft should be considered.

(7) Even for buildings that are nominally airtight, internal wind forces of either pressure or suction may exist, varying from 3 to 6 lb per sq ft, and depending on whether the openings are generally in the windward or in the leeward surfaces. Large internal pressure may arise due to the breaking of windows in the windward side of buildings by reason of flying gravel from the roof or other objects carried by the wind. Still larger internal forces of pressure or suction may arise when the windward or leeward side of a building is completely open. The Subcommittee recommends that for buildings that are nominally air-

tight an internal pressure or suction of 4.5 lb per sq ft should be considered as acting normal to the walls and the roof. For buildings with 30% or more of the wall surfaces open, or subject to being open, an internal pressure of 12 lb per sq ft, or an internal suction of 9 lb per sq ft, is recommended; for buildings that have percentages of wall openings varying from zero to 30% of the wall space, the recommendation is an internal pressure varying uniformly from 4.5 to 12 lb per sq ft, or an internal suction varying uniformly from 4.5 to 9 lb per sq ft.

(8) The Subcommittee recommends that the design wind force applied to any surface of a building be a combination of (*a*) the aforementioned appropriate external wind force, and (*b*) the appropriate indicated internal wind force.

(9) Where a series of roofs exists in one building, one roof being nominally masked by another, the structure as a whole should be designed for the full wind load on the first roof and for 80% of the wind load on the other roofs. Any one roof should be designed for the full wind load.

(10) When wind surfaces are more than 300 ft above the ground, the external and internal wind forces should be scaled up in the proportion that the prescribed wind force on plane surfaces normal to the wind fixed by recommendation (1) at the level under consideration bears to 20 lb per sq ft.

7. Earthquake Effects. The destructive motion in an earthquake is horizontal and consists of a continuous oscillation such that the velocities along the path of motion vary approximately as the ordinates to a sine curve. From this the

$$\text{Max. acceleration} = \frac{2a\pi^2}{T^2}$$

in which a = amplitude of oscillation,
T = time for a complete oscillation.

The horizontal force applied to the structure is caused by its inertia and is

$$F = \frac{2\pi^2 a}{gT^2} W$$

in which W = weight of the structure above the point at which the shear is desired,
g = acceleration due to gravity = 32.2 ft per sec per sec.

Seismological records indicate values of amplitude and time such that the force exerted ranges upward to $0.25W$ or $0.30W$ for very severe

earthquakes. Most authorities agree that a horizontal force should be provided for in the design of structures in regions subject to earthquakes of $0.1W$ to $0.2W$. The forces are treated in a manner similar to wind forces.*

* See various monographs on Earthquake-proof Construction, published by the Portland Cement Association and the American Institute of Steel Construction.

Uniform Building Code, Pacific Coast Building Officials Conference.

Building Code of the City of Los Angeles, August, 1933.

Eng. News-Record, June 22, 1933, p. 804, and Dec. 28, 1933, p. 779.

Dynamics of Earthquake Resistant Structures, by J. J. Creskoff, Consulting Engineer, Washington, D. C.

"Flexible First Story Construction for Earthquake Resistance," by N. B. Green, *Proc. Am. Soc. Civil Engrs.,* February, 1934.

"Engineering Seismology," by Kyoji Suyehiro, *Proc. Am. Soc. Civil Engrs.,* May, 1932, Part 2.

"Progress of Earthquake Resistant Design," by Henry D. Dewell, *Civil Eng.,* October, 1939, p. 601.

CHAPTER II

FIREPROOF FLOORS

The engineering problems involved in the design of a building naturally start with the load-bearing floor system, for upon the type of design selected for the floor depends the design of the beams, girders, columns, and foundations. The major portion of the load to be carried by the structural frame consists of the dead weight of the floors, walls, and partitions, and the first requisite of a good design is the choice of the type of floor best suited to the architectural requirements, loading, and geographical location.

Buildings in the congested districts of our cities are required by law to be fireproof, and, if not so required by law, economy would indicate that they should be highly fire-resisting. Concrete, brick, and tile have long been recognized as the best fire-resisting materials of construction, and their use in the construction of fireproof buildings is universal.

8. Early Types. Before the introduction of reinforced concrete, brick arches sprung between iron or steel beams, as shown in Fig. 1,

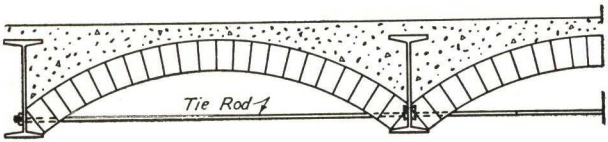

Brick Arch
Fig. 1

were the most common type of fire-resisting floor, and this type is still used to a limited extent for warehouse or other floors carrying very heavy loads.

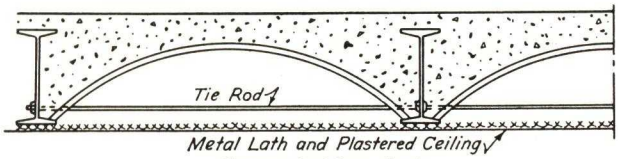

Corrugated Iron Arch
Fig. 2

Corrugated iron arches sprung between I-beams as shown in Fig. 2 were also used. With this type the corrugated iron was used as a form

to hold the concrete until set, and it was thought that the concrete after hardening would carry the loads as an arch. This latter assumption is not borne out by experience. There is little strength left in the floor after the corrugated iron has rusted away.

With either form of arch, it is necessary to tie the I-beams together with rods to resist the thrust of the arch. These tie rods are not so important in the interior panels where the thrusts from adjacent arches act against each other, but the entire thrust of an outside panel must be resisted by the tie rods.

These forms of floor left the bottom flanges of the I-beams exposed to the action of fire, and it was soon recognized that they were to that extent not fireproof. Steel is not combustible but neither is it fireproof, as a relatively low degree of heat softens it and destroys its strength. Various methods of protecting the lower flanges with metal lath and plaster have been tried, but with only partial success. If a flat ceiling is desired, it must be suspended from the floor beams as shown in Fig. 2.

These floors are heavy and require more supporting steel work than the lighter types of reinforced concrete and hollow tile floors which are now used in fireproof construction.

9. Hollow Tile Arches. Terra cotta as a construction material was first introduced in 1871 and rapidly replaced the heavier brick and concrete types of floor construction which were then in use. For the

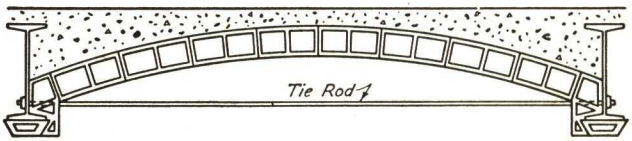

Segmental Arch
Fig. 3

heavier loadings, segmental arches were used as shown in Fig. 3, but the flat arch shown in Fig. 4 was the type which was almost universally used until the newer types of reinforced concrete floor were introduced in the early years of the present century. In the flat arch the skew blocks are cut away at the bottom for the bottom flange of the I-beam, and a small soffit block under the bottom flange is held in place by the adjacent skew blocks and the mortar bedding.

Flat arch floor tile units are classified as end construction or side construction, depending upon the direction of the openings or cells with respect to the line of thrust. Figure 4 shows a flat arch floor which has all end construction blocks with the exception of the keys. Figure

5 has side construction skews and keys. Tile, being a clay product, has been fired at very high temperatures in manufacture and is more nearly fireproof than almost any other building material. Long-continued conflagrations have practically no dehydrating effect upon it. Its cellular construction also helps to insulate the floor against both heat and sound. The supporting falsework is quite simple, does not

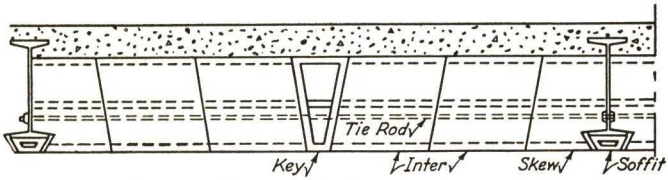

Terra Cotta Flat Arch
Fig. 4

interfere with operations on the floor below, and may be removed after 24 to 36 hr and reused many times. These advantages are partially offset by the difficulty of fitting it into irregular spaces, the necessity of having all supporting beams parallel or nearly so, and the possibility of having cracked or broken tile covered up in the work and not detected.

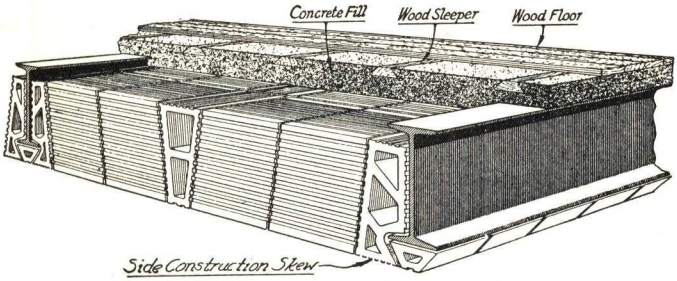

Courtesy of Engineering Experiment Station, Ohio State University.

FIG. 5. Typical Flat Arch Floor Installation.

In present-day practice the tile setter frequently has to break out the side wall of the lower cell in order to clear the tie rod. A little care in the drafting room in spacing the holes in the beams for the tie rods so that the tie rods could come in the mortar joints between the tile rows would eliminate the necessity of breaking the tile units.

As shown in Fig. 5, the tile arches are usually covered with 2 or 3 in. of cinder concrete in which nailing strips are bedded for securing the wood floor, or on which a tile, terrazzo, or cement finish may be placed.

This topping will undoubtedly add somewhat to the strength of the floor.

In selecting a spacing for the supporting beams it should be borne in mind that the beams and tile should be about the same depth in order that the filling material on top of the tile may be kept at a minimum.

In spite of their wide and long-continued use in floor construction, no very satisfactory method of design is in common use. Their design is accomplished almost entirely by reference to safe load tables published in various handbooks. The safe loads are always given in pounds per square foot of floor, uniformly distributed, and very little information is available concerning the action of these floors under concentrated loads.*

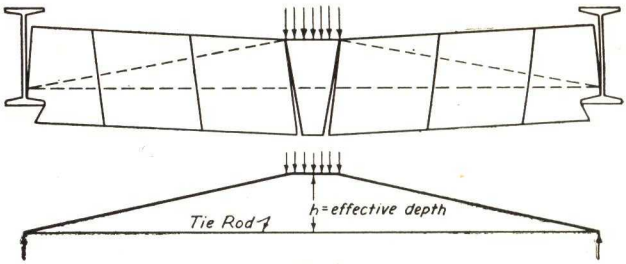

Fig. 6

Tests at the Ohio State University Engineering Experiment Station† show that, at failure, the action of the arch is analogous to that of a simple truss, as shown in Fig. 6. Quoting from the bulletin above referred to,

> In order to present the results of all tests in tangible form, we have chosen safe working stresses in steel and tile at 0.3 of those found at test failure. This corresponds to a factor of safety of 3⅓ and sets the allowable internal compressive force at 3000 lb per key (or tile row) and the allowable unit stress in the tie rod steel at the familiar figure of 18,000 lb per sq in. of net section at the root of thread.

Let C = total compression in the tile, assumed to act ½ in. below the top of the tile,

T = total tension in the tie rods,

h = effective depth of the arch.

* "Tests of Hollow Tile Flat Arch Floors," by Clyde T. Morris, *Eng. Record,* April 29, 1916, p. 584.

† "Strength of Flat Arch Floor Construction," by Clyde T. Morris and George E. Large, *Bulletin* 78, Ohio State University Engineering Experiment Station.

Then

$$Ch = Th = \frac{wL^2}{8} \quad \text{(all units in feet and pounds)}$$

For the case of a 6-ft span with an effective depth of 7½ in. (12-in. tile),

$$w = \frac{8 \times 0.625 \times 3000}{6 \times 6} = 416 \text{ lb per sq ft safe } DL + LL$$

The required net area of tie rod for a single row of tiles (12 in. wide) would be

$$\frac{3000}{18{,}000} = 0.167 \text{ sq in.}$$

This would require ¾-in. tie rods spaced about 2-ft centers, or 1-in. rods spaced about 3.3-ft centers. If, as it often happens, 12-in. tiles are used to carry design loads much less than 416 lb per sq ft of floor, the steel area may be reduced in direct proportion. The tile stress will, of course, be less than the allowable. It was found in these tests that the strength of the floor when the first crack appears depends directly upon the initial tension in the tie rods, and it is therefore important that these be well tightened before the tile is set. A little experience in tapping with a hammer will enable the inspector to judge the uniformity of tie rod tension.

The table of safe loads on page 14 is derived from various published safe load tables compared with the tests of 12-in. tile floors at the Ohio State University. The safe loads in this table are calculated on the assumption that there is sufficient steel in the tie rods to develop the full strength of the tile, that the tie rods are placed as low as possible on the web of the I-beams, and that they are tightened to an initial stress of about 18,000 lb per sq in.

10. Reinforced Concrete Slabs. Because of its well-fostered promotion as a building material, the rapid advance in the art of using it, and its increasing popularity as a fire-resisting material, reinforced concrete has largely replaced hollow tile in floor construction. The first concrete floors were solid slabs supported on steel or reinforced concrete beams as shown in Fig. 7. It is assumed that the student is familiar with the principles of reinforced concrete construction and their application to simple beams and slabs.*

* *Reinforced Concrete Design,* by Sutherland and Reese, and *Concrete Plain and Reinforced,* 4th Ed., by Taylor, Thompson, and Smulski.

TERRA COTTA FLAT ARCHES
SAFE LOAD TABLE. DEAD LOAD PLUS LIVE LOAD
Factor of safety 3⅓

Depth Wt./sq ft	6 in. 26 lb	8 in. 32 lb	10 in. 38 lb	12 in. 42 lb	15 in. 50 lb
Span					
3 ft 6 in.	244	571	897	1224	1715
4 ft 0 in.	187	438	688	938	1312
4 ft 6 in.	148	346	517	741	1037
5 ft 0 in.	120	280	440	600	840
5 ft 6 in.	—	232	363	496	694
6 ft 0 in.	—	194	306	416	583
6 ft 6 in.	—	166	260	355	497
7 ft 0 in.	—	—	224	306	429
7 ft 6 in.	—	—	195	266	374
8 ft 0 in.	—	—	172	234	328
8 ft 6 in.	—	—	—	208	290
9 ft 0 in.	—	—	—	185	259

11. Combination Slabs. Theoretically, the only value of the concrete below the neutral axis in a slab is to transmit the horizontal shear from the longitudinal reinforcement to the compression area of the

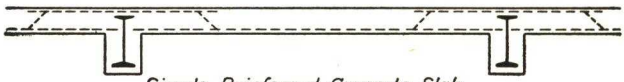

Simple Reinforced Concrete Slab
Fig. 7

concrete. There is usually a great deal more concrete present in a solid slab than is necessary for this, and, in order to reduce the dead load, hollow tile is frequently bedded in the lower part of the slab as shown in Fig. 8. This produces a combination floor which is consid-

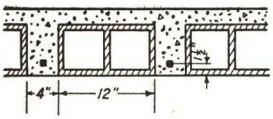

Fig. 8

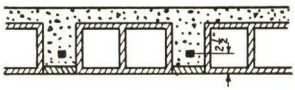

Solid Tile Ceiling
Fig. 9

erably lighter than a solid concrete slab and is but little weaker for the same total depth. The tiles are placed far enough apart to admit the reinforcing bars between them, and the floor is in effect a series of reinforced concrete T-beams with the spaces between the webs filled with hollow tile, thus producing a flat ceiling below.

The difference in the porosity of the tile and the concrete makes this ceiling undesirable when it is to be plastered, as the bands of different materials will soon show through the plastering, giving an unsightly appearance. This may be prevented by using flat slabs of tile under the concrete webs as shown in Fig. 9. This will reduce the effective depth of the T-beam by the thickness of the tile plate.

If the faces of the tile are well scored and the tile is thoroughly clean and wet when the concrete is placed, there is no doubt that there is sufficient bond between the tile and the concrete to take care of the horizontal shear at the top surface of the tile and make it permissible to include the top wall of the tile as a part of the flange area of the T-beam. The bond between the vertical webs of the tile and the concrete may not be perfect because of difficulty of tamping in the narrow webs, and it is on the side of safety to regard only the concrete web in computing the shearing stresses.

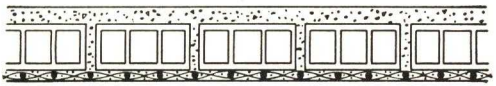

Johnson System
Fig. 10

Another combination tile and concrete floor, known as the Johnson system, was invented by E. V. Johnson, and the patents are controlled by the National Fireproofing Company. The reinforcement is placed entirely beneath the tile and is formed of a heavy wire mesh. The rows of tiles are placed with about 1-in. mortar joints between them and with the reinforcing embedded in 1 to 1½ in. of mortar below the tile. On top of the tile usually there is placed 1 to 3 in. of concrete. The construction is shown in Fig. 10. The Johnson system requires a tight floor for a form upon which to build it, but the rib floors shown in Fig. 9 require only planks under the ribs wide enough to support the edges of the tiles. This is shown in Fig. 11.

A later development which has attained wide use introduces sheet metal forms between the webs of the T-beams, omitting the tile entirely. This method is called "pan" construction and produces a series of T-beams as shown in Fig. 12. These sheet metal forms may be removed and reused after the concrete has set. The pans are usually 20 in. wide. The thickness of the stem may be made to suit the loads to be carried. It is usually about 4 in. thick, which gives a spacing of 24 in. center to center. The thickness of the slab above the pan is usually 2 to 4 in., again depending upon the span and loads. The

depths of the pans may also be varied. For long spans the shearing stresses may be so great as to require the thickening of the webs near

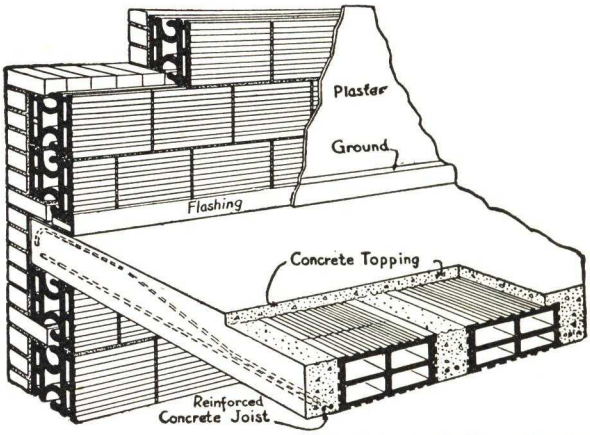

Courtesy National Fireproofing Co.

FIG. 11. Perspective View of Typical One-Way Combination Floor.

their ends. This is done by using one or more sections of tapered pans as shown in Fig. 13.

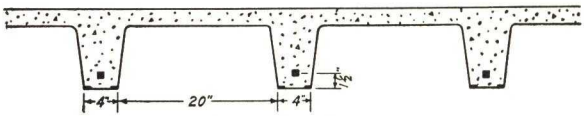

"Pan" Construction

Fig. 12

The ribbed types of floor described in this article do not lend themselves well to the development of continuity over the supports. If a

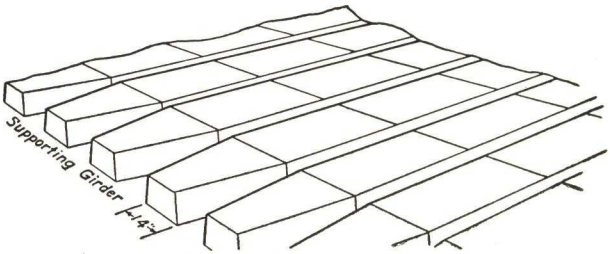

Tapered Floor Pans

Fig. 13

slab is fully continuous over the supports, the maximum negative moment is about double the maximum positive moment at mid span.

The ribbed construction, either pan or combination tile and concrete, permits the bending up of the reinforcement near the supports, and the adding of negative steel over the supports; but the compression area at this point, consisting merely of the webs of the T-beams, is not sufficient to take care of the compressive stress. For this reason these floors frequently require a section of solid slab extending out from the supports far enough to take care of this negative bending.

12. Two-Way Slabs.* When the floor panels between beams are square or nearly square it is both necessary and economical to reinforce the slab in both directions. This makes a thinner slab possible and necessitates the use of supporting beams in the lines of the columns only. An exact analysis of the stresses in the slab is difficult though not impossible but an approximate solution may be obtained by considering the relative deflections of the various parts of the slab under uniform load. This gives results which are safe, and accurate enough for purposes of design.

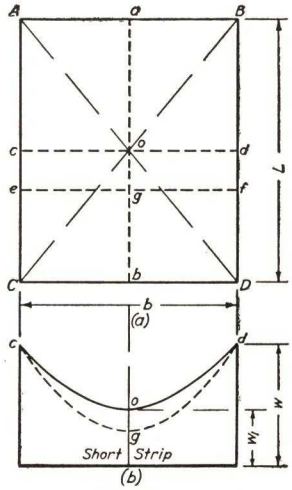

Fig. 14

If *ABCD*, Fig. 14, represents a rectangular slab, supported on the four sides and carrying a uniform load, we may consider the load on any element of the area as being carried by the two elemental strips of the slab, intersecting at right angles at the elemental area. Thus, the elemental strips *a–b* and *c–d* are assumed to carry the elemental load at the center, *O*.

The deflections of the two elemental strips at their point of intersection are equal. Calling this deflection at *O*, *y*, we have, for the two strips *a–b* and *c–d*,

$$y = \frac{5w_2L^4}{384EI} = \frac{5w_1b^4}{384EI}$$

in which w_2 is that part of the load carried by the longer element *a–b*, and w_1 is that part carried by the shorter element *c–d*.

From this it follows that

$$\frac{w_2}{w_1} = \frac{b^4}{L^4} \qquad [1]$$

* See "Moments and Stresses in Slabs," by H. M. Westergaard, *Proc. Am. Concrete Inst.*, Vol. VII, 1921, p. 415.

The factor $5/384$ may not be correct for the load distribution existing, but it will be the same for both strips and will therefore cancel out.

The proportion of the load carried by any elemental strip increases as the point of loading approaches the support, until at the support all of it is carried by the element normal to the support. This follows from a consideration of the deflections.

The form of the curve of loading may be, for convenience, assumed to be a parabola with its vertex at the middle, as shown by the curve *c–O–d* in Fig. 14(*b*).

Consider any other elemental strip, parallel to *c–d*, as *e–f*. The portion of the load at *g*, carried by *e–f*, will be less than the portion of the load at *O*, carried by *c–d*. This is shown by the curve *c–g–d* in Fig. 14(*b*). Thus it will be seen that for full uniform load the maximum unit stress in the slab occurs at the center of the middle element, and it is permissible, therefore, to reduce the amount of reinforcing proceeding outward from the center.

The maximum bending moment in the short strip *c–d* from the parabolic loading assumed, may be shown to be

$$M_S = \frac{wb^2}{8} \times \frac{(6L^4 + b^4)}{6(L^4 + b^4)} \qquad [2]^*$$

The corresponding moment in the long strip *ab* is

$$M_L = \frac{wL^2}{8} \times \frac{(6b^4 + L^4)}{6(b^4 + L^4)} \qquad [3]^*$$

When these two-way slabs are continuous over three or more spans, the moments as calculated above for a simple two-way slab may be diminished according to the following statement evolved originally for one-way slabs.

For buildings, floor slabs which are continuous over more than two spans, where the dead loads are large in comparison with the live loads, and where probability of entirely unloaded panels is small, may be designed for:

(1) A maximum positive moment of two-thirds the maximum simple span moment, and

(2) a maximum negative moment of eight-ninths the maximum simple span moment.

The required thickness of the slab is determined from the larger of

* For ready use, curves may be constructed showing variation of the coefficient of the bending moment for various ratios of L to b.

these two moments, and the amount of reinforcing required in each direction at the middle is determined as for a simple slab carrying an equal bending moment.

The spacing of the reinforcing rods required by the above calculations for the middle strip in each direction may be used for the entire middle half of the slab, and half this number of bars may be equally divided between the two outer quarters, the spacing being gradually increased outward.

13. Girders for Two-Way Slabs. From the analysis of the stresses in the two-way slab given in Art. 12, the distribution of the loads to the supporting beams must be somewhat as shown in Fig. 15. The middle ordinate of the loading diagram for the *long* beam will be the reaction of the *short* middle strip of the slab, and, likewise, the middle ordinate of the loading diagram for the short beam will be the reaction of the *long* middle strip of the slab. These respective middle ordinates are as shown in Fig. 15. This may be shown by integrating the area under the parabola of loading shown in Fig. 14(*b*).

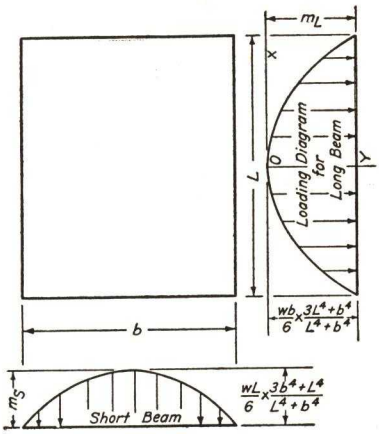

Fig. 15

The shape of the loading curves for the supporting beams may be assumed to be a parabola of the nth degree, and the sum of the areas under these two curves must equal half the total load on the slab, or $\frac{1}{2}wbL$.

For the long supporting beam, with the origin of coordinates at O, the equation of the loading curve is

$$x^n = ky \qquad [4]$$

when $x = L/2$, $y = m_L$, and $k = \dfrac{(L/2)^n}{m_L}$.

Similarly, for the short supporting beam, $k = \dfrac{(b/2)^n}{m_S}$.

Integrating the areas under these two loading curves and equating the sum to $\frac{1}{2}wbL$, the exponent n is found to be 3. The loading curve is a cubic parabola.

If W_L = total load on the long beam, and
W_S = total load on the short beam,

$$W_L = \frac{wbL}{8} \times \frac{3L^4 + b^4}{L^4 + b^4} \qquad [5]$$

$$W_S = \frac{wbL}{8} \times \frac{3b^4 + L^4}{L^4 + b^4} \qquad [6]$$

The maximum bending moments in the two beams will be

$$M_L = 1.2 \times \frac{W_L L}{8} \qquad [7]$$

and

$$M_S = 1.2 \times \frac{W_S b}{8} \qquad [8]$$

in which M_S = maximum moment in the short beam, and
M_L = maximum moment in the long beam.

These loads and moments are based on a single panel. If the beams also carry loads from adjacent panels, as is usually the case, these must be calculated in a similar manner and added.

Here again, a curve sheet showing the division of the slab load between the long and short beams for various ratios of L to b is convenient.

If end connections are adequate and conditions for continuity are present, the moments may be modified according to the amount of end restraint present.

14. Two-Way Combination Slabs. The weight of a two-way slab may be reduced by the insertion of lightweight units on the tension side of the slab as described in Art. 11 for the combination tile and concrete floor. Tiles with open ends cannot be used in a two-way slab, as the concrete from the ribs would run into the cells and little advantage in weight would be gained. Usually concrete blocks made with a light aggregate, such as cinders or bloated clay, are used. These may be cast in any desired size, but are usually about 12 in. square and 4 to 6 in. thick. The concrete ribs between the blocks are usually 4 to 6 in. wide. Figure 16 shows the construction.

Pressed steel domes are sometimes used in place of the filler blocks, producing a floor analogous to the pan construction.

These floors are analyzed in all respects similar to the solid two-way slab described in Art. 12. The reinforcing bars must of course be spaced uniformly, but, if economy in material is sought, smaller bars

may be used in the outer ribs than are required in the middle ribs. This requires care in the field inspection to see that the proper rods are placed in the various ribs.

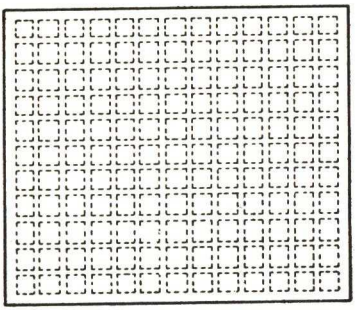

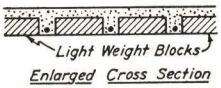

Two-Way Combination Slab
Fig. 16

15. Bar Joists. Lightweight floors of long span are frequently constructed with bar joists as shown in Fig. 17. These consist of longitudinal rods, top and bottom, connected by rod trussing welded to them. These small trusses may be obtained of almost any span and depth desired. These joists are hung from the supporting girders or walls and are spaced 16 to 24 in. apart. They should be tack welded

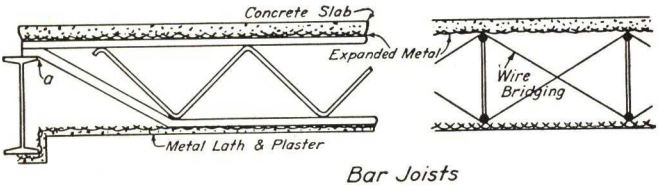

Bar Joists
Fig. 17

or clamped to the flanges of the supporting girders to prevent movement during construction, and the first diagonal of the truss should start downward as close to the flange of the girder as possible, as shown at *a* in Fig. 17.

An expanded metal sheet is wired to the top of the joists on which a thin concrete slab is poured. Expanded metal lath is also wired to the lower flange and plastered from below to form a flat ceiling. To prevent buckling during construction, crossed wires are used as bridging and tightened by twisting. The proper adjustment of this bridging is quite important.*

* See account of bar joist collapse in Atlanta, Ga., *Eng. News-Record,* Sept. 2, 1937, p. 375.

Bar joist floors constructed in the manner described above are permitted as " fireproof " construction by most building codes, but are not nearly so fire resistant as hollow tile or concrete. The only protection of the steel from below is the plastered ceiling.

Bar joists have been used as reinforcing for solid concrete slabs carrying heavy loads. When properly placed, this type of reinforcing provides for the shearing and diagonal tensile stresses in a most excellent manner. A lightweight floor of this type may be constructed

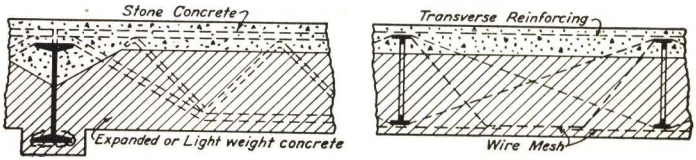

Fig. 18

by using a lightweight concrete for the lower part of the slab with a topping of 2 or 3 in. of stone concrete. The lightweight concrete may be made by using lightweight aggregate, such as cinders or bloated clay, or by introducing a bloating reagent into the concrete mixture.* Such a floor is described in *Engineering News-Record,* Nov. 9, 1933, p. 565. The construction consists of a slab of an expanded, lightweight cellular concrete in which bar joists are embedded. These joists serve to support the dead load of the floor and forms until the concrete is set. On top of the Aerocrete, a layer of stone concrete 2 to 3 in. thick is placed to take the compression. This construction is shown in Fig. 18.

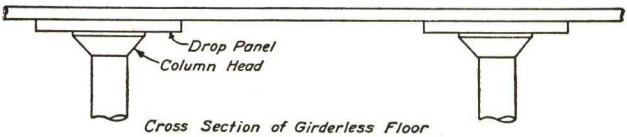

Fig. 19

16. Girderless Floors. The so-called flat slab construction consists of a slab of reinforced concrete so designed that it transfers the floor loads directly to the columns without the use of beams or girders. It is widely used for warehouse and manufacturing buildings, and is adaptable to any construction having reinforced concrete columns spaced approximately equidistant in the two directions, and in which interior girders for wind bracing are not required. See Fig. 19.

* This is called Aerocrete. Patents are controlled by the Aerocrete Corporation of America.

This type of floor was first brought out by Mr. C. A. P. Turner, and, when constructed according to his patents, is called the "mushroom" system. It consists essentially of a reinforced concrete floor slab cast integrally with the columns and reinforced with rods crossing the tops of the columns in four directions. The maximum stress in the slab occurs over the columns, and, for this reason, the top of the column is spread into a capital, thus increasing the thickness of the slab at that point. A modification of this system makes use of a drop panel, or thickening of the slab for a distance surrounding the column cap.

The advantages of this system are a reduced story height for a given clearance between floor and ceiling, better lighting due to the absence of shadows on the ceiling, cheaper construction due to the simplicity of the forms for the floor, and a better interior appearance when interior partitions are absent. For an analysis of the stresses and methods of design of floors of this type, see *Concrete Plain and Reinforced,* by Taylor, Thompson, and Smulski.

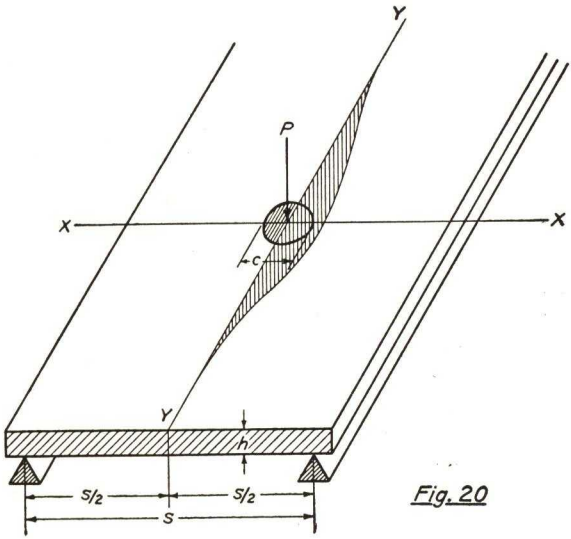

Fig. 20

17. Concentrated Loads on Slabs.* In the design of reinforced concrete floor slabs carrying concentrated loads, the designer is immediately confronted with the question of the width of slab which is effective

* *Bulletin* 80, Engineering Experiment Station, Ohio State University.
Public Roads, Vol. 7, No. 1, March, 1926.
Public Roads, Vol. 11, No. 1, March, 1930.

in resisting the stresses caused by the load. The following discussion is taken mainly from *Bulletin* 80 of the Engineering Experiment Station of the Ohio State University, and only the results applicable to the design of building floors will be given.

The distribution of the stresses in a slab simply supported on two edges and loaded with one or more concentrated loads, as shown in Fig. 20, depends mainly upon the span and the relative distance of

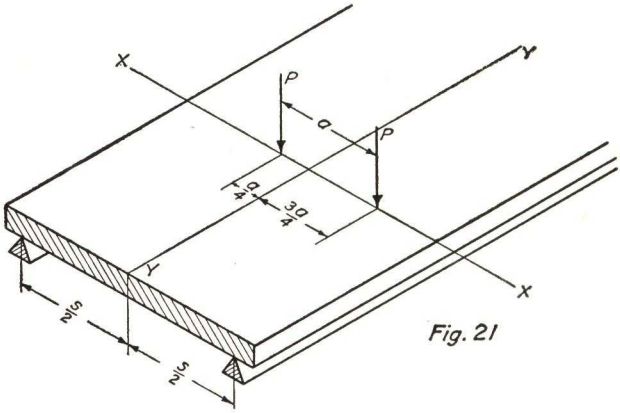

Fig. 21

the loads from the supports. The term " effective width " has come to be recognized as that width of slab used in designing, taken on a line through the load parallel to the supports, over which a concentrated load may be considered as uniformly distributed, which will give the same calculated maximum unit stress in the slab as that actually produced by the load.

For loads on a single element of the slab as shown in Figs. 20 and 21, the effective width may be taken as

$$E = 0.6s + 2C \qquad [9]$$

in which E = effective width,
s = slab span,
C = diameter of a circle over which the concentrated load is assumed to be uniformly applied.

Equation 9 contemplates a slab extending in each direction from the element on which the loads are applied, a distance at least equal to 0.8 of the slab span. For safes or trucks with iron wheels running directly on the slab, C should be taken as 2 to 4 in. For rubber-tired trucks it may be taken as one inch for each thousand pounds load on a wheel.

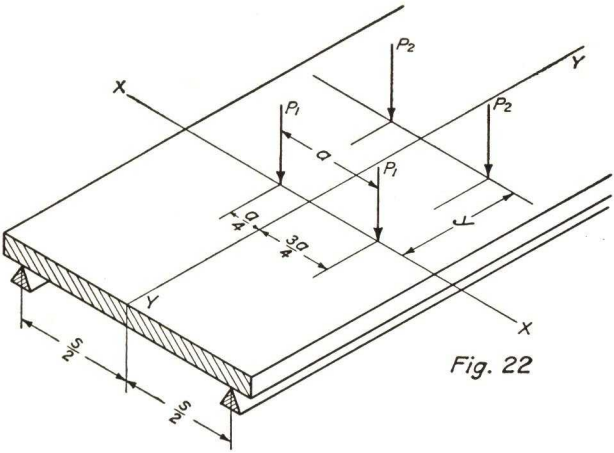

Fig. 22

When loads are applied simultaneously on other parallel elements of the slab, as shown in Fig. 22, the moment in the element x–x is increased, the amount of this increase being

$$\text{Percentage increase} = \frac{100}{1 + 10\left(\frac{y}{s}\right)^2} \qquad [10]$$

in which y = distance between the parallel elements.

CHAPTER III

BEAMS AND GIRDERS

18. Simple Beams. The reader is assumed to be familiar with the design of simple members in flexure as given in textbooks on the design of simple structures.

In most beams and girders the stresses in the compression flanges are critical, and specifications give formulas for reduced working stresses as the slenderness ratio increases. Frequently in building construction the entire top flange of a steel beam or girder is encased in the floor slab as shown in Fig. 7. After the concrete has set, this constitutes ample support to prevent buckling, but, if the forms are suspended from the beam, the distance between positive supports of the compression flange must be considered in calculating stresses due to the weight of the forms and wet concrete.

19. Web Stresses. At the supports and at points where concentrated loads are applied the webs of beams and girders must be stiffened to prevent buckling. Special consideration must be given to diagonal compressive stresses in the webs of girders in which the unit shearing stresses are high.*

The requirement of the specifications of the American Institute of Steel Construction (1941) that the webs of plate girders shall be stiffened when the ratio h/t exceeds $8000/\sqrt{s}$ is probably safe. In this equation,

h = clear depth of the web between flanges,
t = thickness of the web,
s = maximum unit shearing stress in the panel assuming that the web takes all the shear and that it is uniformly distributed over the web area.

* "Elastic Stability in Structures," by S. Timoshenko, *Trans. Am. Soc. Civil Engrs.*, Vol. 94, 1930, p. 1000.

"Stability of the Webs of Plate Girders," by S. Timoshenko, presented before Structural Division, American Society of Civil Engineers, June, 1933.

"Stiffener Spacing for Plate Girder Webs," by Otis E. Hovey, *Eng. News-Record,* March 12, 1931, p. 446.

"Elastic Stability of Webs of Plate Girders," by Otis E. Hovey, *Bulletin* **374**, American Railway Engineering Association, February, 1935, p. 718.

"Strength of Webs of I-Beams and Girders," by H. F. Moore and W. M. Wilson, *Bulletin* 86, University of Illinois Engineering Experiment Station.

"Web Buckling in Steel Beams," by Inge Lyse and H. J. Godfrey, *Trans. Am. Soc. Civil Engrs.*, Vol. 100, 1935, p. 675.

The requirement of the specifications for longitudinal spacing of intermediate stiffeners also probably is safe so long as the distance between stiffeners does not exceed the clear depth of the web.

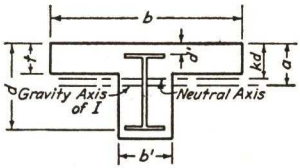

Fig. 23

20. Composite Beams. When steel beams are completely encased in concrete, as shown in Fig. 7, it is permissible to consider the beam as a composite section for carrying loads which come upon it after the concrete has fully hardened. Dead loads applied prior to the hardening of the concrete are carried entirely by the steel section. The stresses in the composite section may be figured in all respects similar to reinforced concrete T-beams.*

Figure 23 represents a steel I-beam encased in concrete. The following notation is used:

A_B = area of steel beam,
I_B = moment of inertia of steel beam,
n = ratio of modulus of elasticity of steel to that of concrete,
b = effective width of slab which may be considered as flange,
I = equivalent moment of inertia of transformed section,
f_c = extreme fiber stress in concrete at top,
f_s' = extreme fiber stress in top of steel beam,
f_s = extreme fiber stress in bottom of steel beam.

The usual assumption is made that the concrete in the stem below the slab is disregarded in the stress calculations. The following equations give the necessary relationships for calculating the fiber stresses

$$kd = \frac{bt^2 + 2nA_Ba}{2[bt + nA_B]} \qquad [1]$$

$$I = bt\left[\frac{t^2}{12} + \left(kd - \frac{t}{2}\right)^2\right] + n[I_B + A_B(a - kd)^2] \qquad [2]$$

$$f_c = \frac{Mkd}{I} \qquad [3]$$

$$f_s' = \frac{M(kd - d')n}{I} \qquad [4]$$

$$f_s = \frac{M(d - kd)n}{I} \qquad [5]$$

* See *Concrete Plain and Reinforced,* by Taylor, Thompson, and Smulski, 4th Ed., Vol. I, pp. 215 *et seq.*

"Gunite and Concrete Encasement to Increase the Strength of Structural Steel," *Bulletin* 37, Engineering Experiment Station, Ohio State University.

21. Floor Framing Layouts.* The arrangement of the floor girders† is usually dictated by the column spacing, which in turn is determined more or less rigidly by the space requirements of the prospective tenants of the building.

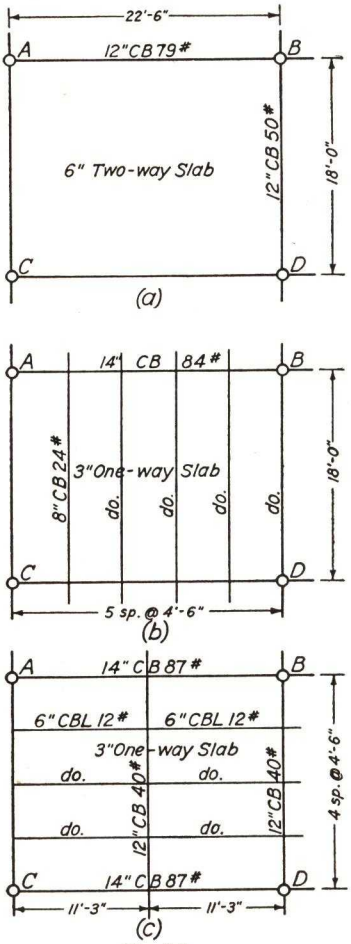

Fig. 24

The arrangement and spacing of the floor beams are determined by the type of floor which is to be used. As the floor and floor framing constitute a considerable portion of the cost of a building, it is wise to give the problem some study. As a rule, the most economical system is that which transfers the load most directly from its point of application to the supports. The following of this rule blindly would result in floors consisting of slabs supported only by the girders connecting the columns, and if the spans were long this might give a floor of excessive weight.

Figure 24 illustrates three methods of framing for a panel 18 ft × 22.5 ft. As shown in Fig. 24(*a*), the entire opening 18 ft × 22.5 ft might be floored with a two-way slab as described in Art. 12 or it might be floored with a ribbed slab as shown in Fig. 8, or Fig. 12. In the latter case the beams *AC* and *BD* would carry little load and would be used mainly as column spacers.

The framing of Fig. 24(*b*) would permit the use of a thin slab (Fig. 7) or tile arch floor (Fig. 5). All transverse beams, including *AC* and *BD*, would carry the same floor load and *AB* and *CD* would be heavy girders.

The framing shown in Fig. 24(*c*) provides an indirect path from the load to the column supports.

* "Stress Paths and Economical Framing," by Geo. Booss, Jr., *Eng. News-Record*, Sept. 2, 1937, p. 402.

† The term *floor beam* is here used to designate beams carrying floor loads directly; the term *girder* indicates a beam carrying other beams.

To illustrate the relative economies of the three arrangements shown in Fig. 24, the floor surface will be assumed to be ¾-in. oak, laid on a 2-in. cinder concrete fill on top of the reinforced concrete slab with a suspended ceiling below. The estimate of dead load follows, assuming a two-way slab as in Fig. 24 (*a*):

¾-in. oak flooring		2.6 lb per sq ft
2-in. cinder concrete		16.7
Suspended ceiling		10.0
Slab, say 6 in. thick		72.0
Dead load	=	101.3 lb per sq ft
Live load	=	80 " " " "
Total		181.3 " " " "

From equations [2] and [3] of Art. 12:

$$M_S = 5570 \text{ ft-lb} \quad \text{and} \quad M_L = 4680 \text{ ft-lb}$$

If the panel is an interior panel and the slab is continuous over several adjacent panels, two-thirds of the above simple span moments may be used. This will require a slab of about 6 in. total thickness if a permissible unit stress in the concrete of 1000 lb per sq in. is used.

The design of the supporting beams must be more or less a trial and error process because of the weight of the beam and its encasement, which depends on the beam size. For the long beams the load from the slab, from equation [5] of Art. 13, will be

$$W_L = 2 \times 22.2 = 44.4 \text{ kips}$$

and the bending moment from equation [7], Art. 13, is

$$M_L = 150.00 \text{ ft-kips}$$

To this must be added the moment due to the weight of the beam itself and its encasement. There is usually little difference in the tensile unit stress in the steel beam whether the reinforcing effect of the concrete encasement is considered or not. The encasement of course greatly reduces the compressive unit stress and the deflection.

The beam encasement will extend about 10 in. below the slab and will be 16 in. wide. This adds about 215 lb per ft to the load to be carried, giving a total bending moment of

$$M = 150.0 + 13.6 = 163.6 \text{ ft-kips}$$

Using a permissible tensile unit stress of 20,000 lb per sq in., the required section modulus is 98.2, giving a 12 in. WF at 79 lb.

Estimated weight below slab

$$10 \text{ in.} \times 16 \text{ in.} \frac{(160 - 23)144}{144} = 137 \text{ lb}$$

(23 sq in. = area of beam)

Beam weight	= 79
Total	= 216 lb

By the same process the required size of the short beam is 12 in. WF at 50 lb.

For the arrangements shown in Figs. 24(*b*) and 24(*c*) the slab span is 4 ft and 6 in., and a 3-in. reinforced concrete slab is sufficient. The required sizes of beams and girders are shown on the sketches.

Estimates have been made of the following:

(1) Dead load to each column.
(2) Total concrete per panel.
(3) Total structural steel per panel.
(4) Estimated cost per panel.

In estimating the costs the same unit price per cubic foot ($0.80) has been used for all concrete, including reinforcing steel, although it is recognized that the arrangements shown in Figs. 24(*b*) and 24(*c*) would be more expensive to build. The structural steel has been estimated at 5 cents per lb in place. The following table shows the comparisons:

	Fig. 24(*a*)	Fig. 24(*b*)	Fig. 24(*c*)
Dead load per column	48.70^k	43.30^k	45.25^k
Concrete per panel	237.1 cu ft	190.0 cu ft	202.5 cu ft
Structural steel	2770 lb	4170 lb	4360 lb
Cost per panel	$328.20	$360.50	$380.00

Figure 24(*b*) is the lightest in weight. At the prices given, Fig. 24(*a*) is the cheapest. A different ratio of cost of concrete to cost of steel might give a different result.

22. Deflections. Calculation of the deflection of a floor system is frequently necessary. As a general rule, if the deflection of a beam or slab exceeds about $\frac{1}{360}$ of the span there is danger of cracks forming in the plastered ceilings beneath the floor. Also excessive flexibility of a structure may cause apprehension among the tenants, especially if they are on the upper floors of very tall buildings or in theater balconies. Theater balconies are usually required to be built

without intermediate columns for that portion extending over the lower seat banks, and this frequently necessitates very long shallow girders.

The sketch (Fig. 25) shows an example of theater balcony framing taken from an existing structure. The lower seat bank extends back under the balcony to the columns supporting girders $G5$, three seat

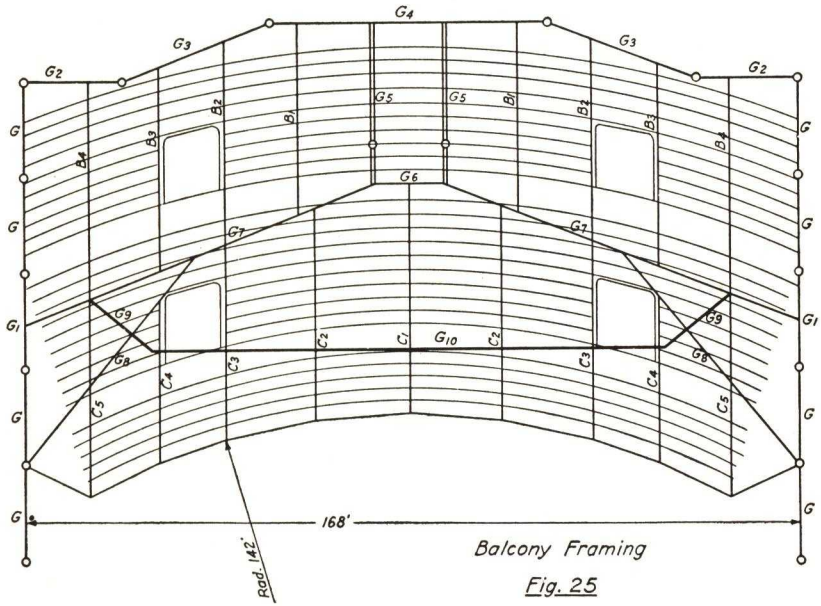

Balcony Framing

Fig. 25

rows back of $G6$. The small circles indicate columns below the balcony level. The columns in the outside walls are the only ones extending above this level. The roof framing is supported from trusses spanning the entire auditorium.

The girders $G5$ are supported on girder $G4$ and are cantilevered over the two columns to carry girders $G6$ and $G7$. The other end of girder $G7$ is carried on $G1$ in the outside wall.

Girder $G8$ is supported by the outside wall column and girder $G7$ and carries the cantilever girders $G9$ and $C5$. The long girder $G10$ is supported on the two cantilever girders $G9$.

The cantilever beams $C1$ to $C5$ carry the front portion of the balcony floor and beams $B1$ to $B4$ carry the rear portion of the floor.

In cantilever balcony framing,* the restricted space between the ceiling below and the seat bank above makes shallow girders neces-

* See *Concrete Plain and Reinforced,* by Taylor, Thompson, and Smulski, 4th Ed., Vol. I, Chap. XVIII.

sary, and these frequently must be increased in weight above strength requirements in order to keep the deflections within permissible limits.

In calculating deflections of beams or girders which are encased or partially encased in concrete, the effect of the concrete in adding to the stiffness of the steel member must be evaluated. This may be done, as in the case of composite beams, Art. 20, by using the moment of inertia of a transformed section.*

The deflection behavior of a reinforced concrete beam or of a steel beam encased in concrete is quite different on its first loading from that of subsequent loadings. Also, owing to plastic flow effects, the amount of the deflection depends upon the time which the load is allowed to remain on the beam.

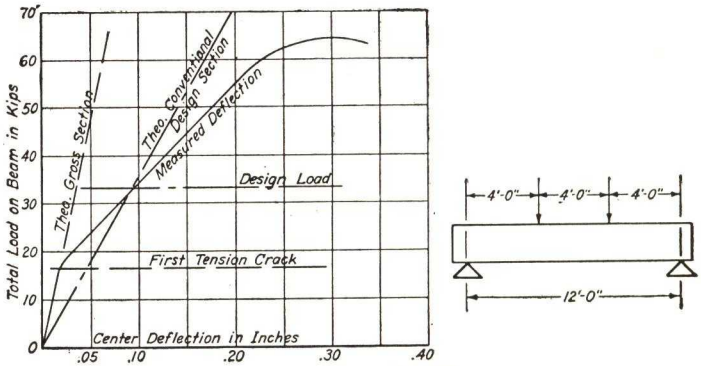

Fig. 26

Figure 26 shows a typical deflection curve of a simple reinforced concrete beam in which the load is applied in regular increments to failure. Some effects of plastic flow are certainly present in the test, as the time necessary for applying the loads and taking the many readings required is about 2½ hr. In the Engineering Experiment Station of the Ohio State University records are on file of a great number of tests similar to the one shown.

There are several characteristic features of these deflection curves. *First,* the two parts of the curve are almost absolutely straight lines. *Second,* before the first tension crack appears the measured deflections agree almost exactly with the theoretical calculated deflection, using the value of E_c as determined by a simultaneous test of concrete

* For an excellent discussion of deflections of reinforced concrete beams, see *Principles of Reinforced Concrete Construction,* by Turneaure and Maurer, 2nd Ed., pp. 116 and 179.

cylinders made from the same batches as the beam, and the theoretical moment of inertia including the entire cross section of the beam. *Third,* after tension cracks appear the slope of the deflection curve increases greatly, this slope being considerably greater than the slope of the theoretical deflection line, considering only the concrete above the neutral axis as being effective. *Fourth,* first tension cracks appear at about half the design load and the ultimate load is about double the design load.

In a structure the dead load will ordinarily constitute at least half or more of the total design load. It is therefore probable that initial tension cracks will be present in the beams before any live load is applied.

In calculating dead load deflections the full cross section may be considered effective, but on account of plastic flow the value of the modulus of elasticity must be greatly reduced.*

Live load deflections will occur after the tension cracks have appeared, and therefore in calculating such deflections the "cracked" section should be used with a modulus of elasticity not more than half that used in design.

There are many uncertainties in deflection calculations of members of which concrete is a part, and such calculations are far from satisfactory.

23. Continuity. The usual end connections for steel beams are designed to transmit the end shear only and give little restraint to bending. If it is desired to provide for continuity, positive connection must be made of the upper tension flanges over the supports and suitable bearing for the compression flanges at the bottom. For beams or joists in a simple steel floor system it usually is not economical to provide for continuity as the cost of the necessary end connections will more than offset the saving in material due to the reduction in bending moment; however, the reinforcement for the floor slab must be carried over all supports to prevent cracks forming due to negative moment.

For lateral stability the girders usually must be connected with sufficient rigidity to the columns to transmit considerable negative moment. When this condition exists, the entire frame consisting of columns and girders must be considered in figuring the moments and shears to be transmitted at the joints. This will be treated in Chapters VI, VII, and XI.

* See "Effect of Plastic Flow and Volume Changes on Design," *J. Am. Concrete Inst.,* November-December, 1936, p. 123.

CHAPTER IV

DEFLECTIONS

Methods of calculation of stresses in indeterminate frameworks depend upon a knowledge of the relative slope changes and deflections at the joints of the structure. It is therefore necessary that methods of calculating these deformations be developed before considering statically indeterminate frameworks.

There are two methods of deriving expressions for deflection: (1) by means of energy or work equations, and (2) by geometric relationships. The two methods lead to identical results.

24. Deflection of Trusses. The *unit load* or *dummy load* method of finding the deflection of a truss is based upon strain energy relationships.

Let Fig. 27 represent any truss, loaded and supported in any manner. The work done by the external forces (loads) in deflecting the truss must equal the work done by the internal forces (stresses) in changing the lengths of the members. In the truss shown, all members are of known length and cross-sectional area, and it is required to find the deflection of the point X due to any given loading.

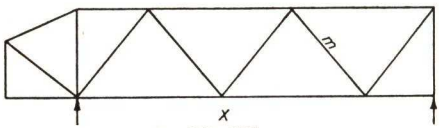

Fig. 27

Let the length and area of cross section of any member, say member m, be L_m and A_m respectively. Assume the primary loading to be removed from the truss, and a unity load to be applied to the truss at point X, in the direction of the required deflection. This unity load produces stresses in the members of the truss which will be designated as U-stresses. For member m, the stress due to unity load is U_m. The computed stresses in the members due to the primary loading may be designated as S-stresses. For the member m, the stress due to the primary loading is S_m.

The work done, or strain energy, is the product of the force times the distance through which it acts. The deformation of the member m due to the primary loading is $\frac{S_m L_m}{A_m E}$. Assuming the unity load at X to be

acting when the primary load is applied, the work done on the member *m by the unity load* will be $\frac{U_m S_m L_m}{A_m E}$. The total strain energy stored in all the members of the truss by the unity load will be $\Sigma \frac{SUL}{AE}$. Since the internal work done *by the unity load* must equal the external work done by the same load,

$$\Delta \times \text{Unity} = \Sigma \frac{SUL}{AE} \qquad [1]$$

Note that the unity load is applied at the point where the deflection is desired, *in the direction of the deflection.* If the unity load is applied in the opposite direction, the deflection will come out negative. In making the summation, tension and compression should be distinguished by using plus and minus signs.

25. Deflection of Girders. If, instead of a truss, we have a girder with a solid web, the deflection may be found in a manner similar to that used for the truss, by regarding the individual fibers of the girder as corresponding to the chord members of the truss. In a girder of usual proportions the shearing stresses contribute little to the deflection and will be disregarded in this analysis. For unusually deep girders in which the shearing stresses are high and the bending stresses low, it may be necessary to make corrections for deflection due to shear.

Let M = the moment, at any point, of the external forces producing the deflection,
m = the moment, at any point, of the unity force acting at the point where Δ is desired, in the direction of the deflection,
s = unit stress in any fiber, produced by the loads producing Δ,
u = unit stress in any fiber, produced by the unity force,
v = distance from the neutral axis to the fiber in question,
a = area of cross section of a fiber.

$$s = \frac{Mv}{I} \qquad u = \frac{mv}{I}$$

Multiplying both the numerator and denominator of equation [1] by A, we get

$$\Delta = \frac{1}{E} \Sigma \frac{SUAL}{AA}$$

Translating this into girder fibers,

$$s = \frac{S}{A} \quad \text{and} \quad u = \frac{U}{A}$$

$$\Delta = \frac{1}{E}\sum suaL = \frac{1}{E}\sum \frac{Mmv^2}{I^2}\, aL$$

$$av^2 = I$$

and

$$\Delta = \frac{1}{E}\int_0^L \frac{Mm}{I}\, dL \qquad [2]$$

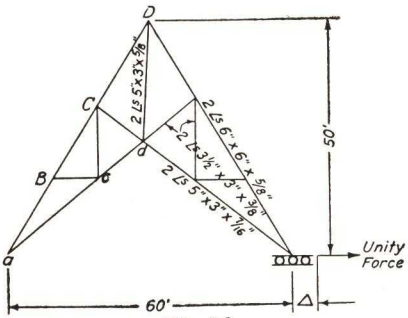

Fig. 28

26. Deflection Calculations. Frequently trusses over auditoriums, on account of architectural requirements, are of a form subject to large horizontal deflections, and provision for movements must be made at the supports. Otherwise, large horizontal forces are set up which may crack the side walls. Such a truss is shown in Fig. 28. The problem is to find the horizontal deflection at the support due to dead load. The dead load panel load is 15,540 lb. The necessary calculations for solving equation [1] are given in the following table. Gross areas should always be used in calculating deflections.

Member	$DL\ S$	U	L	A	$\frac{SUL}{A}$
AB	90.7(c)	1.94(c)	233	14.22	2883
BC	72.5(c)	1.94(c)	233	14.22	2304
CD	54.4(c)	1.94(c)	233	14.22	1729
ac	60.7(t)	2.60(t)	312	6.62	7438
cd	48.6(t)	2.60(t)	156	6.62	2978
Cc	7.8(t)	0	200	4.60	0
Dd	77.7(t)	3.33(t)	300	9.22	4214(½)
Bc	9.3(c)	0	120	4.60	0
Cd	12.1(c)	0	156	4.60	0
					21,546 × 2 = 43,092

$$\Delta = \frac{43{,}092}{29{,}000} = 1.485 \text{ in.}$$

This deflection is under dead load alone. Under maximum snow and wind load it would be greatly increased.

Usually beams are of constant cross section. I in equation [2] is therefore constant and may be moved before the integral sign. To illustrate the use of this equation a simple case will be solved.

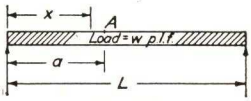

Fig. 29

Let it be required to find the deflection of the beam shown in Fig. 29 at the point A, due to a uniform load w per linear foot.

The unity load is applied at A in the direction of the deflection (downward).

$$\Delta = \frac{1}{EI}\int_0^L Mmdx$$

$$M = \frac{wL}{2}x - \frac{wx^2}{2}$$

When x is less than a,

$$m = \frac{L-a}{L}x$$

When x is greater than a,

$$m = a\left(1 - \frac{x}{L}\right)$$

Substituting these values in Equation 2,

$$\Delta = \frac{1}{EI}\left[\frac{L-a}{2L}\int_0^a\left(wLx^2 - wx^3\right)dx + \frac{a}{2}\int_a^L\left(wLx - 2wx^2 + \frac{wx^3}{L}\right)dx\right]$$

$$\Delta = \frac{wa}{24EI}\left(a^3 - 2a^2L + L^3\right)$$

When $a = \frac{L}{2}$, this becomes

$$\Delta = \frac{5wL^4}{384EI}$$

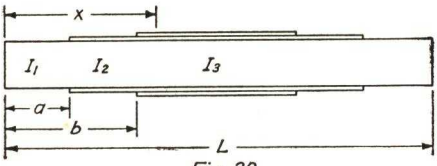

Fig. 30

27. Girders with Variable Cross Section. The most common form of beam with variable cross section is the plate girder with cover plates.

In the girder, shown in Fig. 30, let it be required to find the deflection at the middle, due to a uniform load w per foot.

I_1 is constant for the distance a.
I_2 is constant for the distance b–a.
I_3 is constant for the distance L–$2b$.
In equation [2],

$$M = \frac{wL}{2}x - \frac{wx^2}{2}$$

$$m = \frac{x}{2}$$

$$\Delta = \frac{w}{2E}\left[\frac{1}{I_1}\int_0^a (Lx^2-x^3)dx + \frac{1}{I_2}\int_a^b (Lx^2-x^3)dx + \frac{1}{I_3}\int_b^{\frac{L}{2}} (Lx^2-x^3)dx\right]$$

$$\Delta = \frac{5wL^4}{384EI_3} - \frac{w}{8E}\left[\frac{a^4}{I_1} - \frac{a^4}{I_2} + \frac{b^4}{I_2} - \frac{b^4}{I_3}\right] + \frac{wL}{6E}\left[\frac{a^3}{I_1} - \frac{a^3}{I_2} + \frac{b^3}{I_2} - \frac{b^3}{I_3}\right] \quad [3]$$

When the variation in cross section is accompanied by a change in depth the girder may be divided into a number of sections and the average moment of inertia of each section regarded as constant for that section. The procedure then is the same as for the cover plated girder shown above.

CHAPTER V

COLUMNS

28. The Ideal Column. Any column will fail by buckling when the sum of the unit stresses due to the direct load (P/A) and to the bending moment (Mc/I) reaches the elastic limit of the material. The bending moment on the column increases as the deflection increases. At the elastic limit the deformation increases without additional load, and consequently the column buckles.

The average unit stress on the column cross section (P/A) which will cause failure of an ideal column, centrally loaded, with hinged ends is given by Euler's formula,*

$$s_c = \frac{P}{A} = \pi^2 E \frac{r^2}{L^2} \quad \text{Euler's formula} \qquad [1]$$

where r is the least radius of gyration of the column cross section.

An ideal column is one having a perfectly straight axis, and the material of which is homogeneous throughout. Such columns do not exist in practice.

Euler's formula does not hold for small values of L/r, for which it would give values of s_c greater than the elastic limit of the material.

29. Eccentrically Loaded Columns. When an ideal column with hinged ends is eccentrically loaded, the center deflection may be shown to be†

$$\Delta = e\left(\sec\sqrt{\frac{PL^2}{4EI}} - 1\right) \qquad [2]‡$$

in which e = eccentricity of the load. If $e_1 = e + \Delta = e \sec\sqrt{\frac{PL^2}{4EI}}$,

* See any book on strength of materials. *Strength of Materials,* by James E. Boyd, 4th Ed., p. 378.

† See *Stresses in Structures,* by A. H. Heller, 3rd Ed., p. 180.
Strength of Materials, by James E. Boyd, 4th Ed., p. 376.

‡ $\sqrt{\frac{PL^2}{4EI}}$ is an angle in radians.

the average unit stress on the column at failure will be

$$s_c = \frac{P}{A} = \frac{s_e}{1 + \frac{e_1 c}{r^2}} \qquad [3]$$

in which s_e = the elastic limit of the material. This equation cannot be used satisfactorily as a column formula because P appears on both sides of the equation. Also, in most cases, it is difficult to assign a rational value to the eccentricity, e.

Fig. 31

30. Column Formulas. Because of the difficulty in assigning satisfactory values to the many variables in equation [3], and of the difficulty in applying it to columns in practice, it is not used in design.

Column formulas commonly used in practice in America are of three types, the *Rankine,* the *straight line,* and the *parabolic.* All are empirical and are designed to approximate the records of column tests. All column formulas used in design contain a factor of safety, and supposedly give the maximum *safe loads* for centrally loaded columns.

The *Rankine* type follows the general form of equation [3] with an arbitrary constant in the denominator.

$$s_c = \frac{s_{\max}}{1 + \frac{KL^2}{r^2}} \quad \text{Rankine type} \qquad [4]$$

The factor of safety is included in the selection of the unit stress in the numerator. This stress is usually about half the elastic limit. This type of formula can be made to agree fairly well with tests for all except very small values of L/r. When it is used, an upper limit for s_c is usually specified. (Fig. 32, I.)

The straight line formula applies only to a narrow range of values of L/r, usually from about 50 to 120. (Fig. 32, II.)

$$s_c = s_{\max} - \frac{kL}{r} \quad \text{Straight line type} \qquad [5]$$

The *parabolic* formula may be made to agree with tests of columns up to values of L/r of about 120. Beyond that some other type of formula must be used. The 1936 and 1941 editions of the specifications of the American Institute of Steel Construction use a parabolic formula for values of L/r less than 120, and a Rankine formula for larger values. (Fig. 32, III.)

$$s_c = s_{\max} - k\frac{L^2}{r^2} \quad \text{Parabolic type} \qquad [6]$$

Figure 32 shows the three types of column formulas in common use for building design. The dotted portions of the curves are usually regarded as inapplicable.

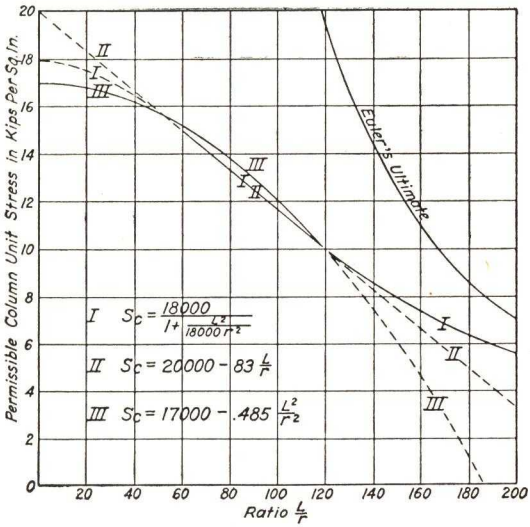

Fig. 32

The column formulas shown in Fig. 32 apply to steel of structural grade, elastic limit 32,000 to 36,000 lb per sq in. When material is used which has higher values of elastic limit and ultimate strength, higher values of the allowable unit stress may be used for the lower values of L/r. It must be borne in mind, however, that, as yet, no method has been discovered of increasing the modulus of elasticity beyond about 30,000,000 lb per sq in.; therefore the ultimate strength of an ideal column whose ratio L/r is greater than about 80 will not be increased by increasing the elastic limit and ultimate strength of the material. In fact the modulus of elasticity of high alloy steels is usually less than that of steel of structural grade. Only for large columns with small values of L/r is it economical to use high strength, alloy steels.

31. End Conditions. Theoretically, if the ends of an ideal column are fixed so that they cannot rotate, the effective length L used in determining the ratio L/r is one-half the total length of the column. The ideal *hinged* or *fixed* end conditions are seldom if ever realized in practice.* A pin end is not a hinged end because of the friction in the joint. When the end of a column is a plane, normal to its axis, and rests evenly on a plane surface, it is said to have a flat end. Under ideal conditions, a flat end may approach a fixed end condition. However, it is not safe to assume that the bearing of the end of a basement column on the footing constitutes a fixed end, as a very slight error in leveling the footing or in planing the end of the column may produce conditions as bad or worse than a hinged end.†

* "Fixed End Columns in Practice," *Eng. News*, Vol. 66, 1911, p. 530.

† See "Dead Load Stresses in the Columns of a Tall Building," *Bulletin* 40, Engineering Experiment Station, Ohio State University.

Riveted ends are never fixed ends because of the elasticity of the connection.

In any structure the bending of girders and beams connecting to the columns will cause rotation of the joints and induce bending moments in the members at the joints. These joint rotations cause the flexure lines of columns to approach more nearly to the condition of hinged than fixed ends. For this reason most modern American specifications do not mention the end conditions in giving the column formulas. The formulas shown in Fig. 32 are derived for the hinged end condition and may be used for all concentrically loaded columns, regardless of the end conditions.

32. Combined Bending and Compression. Most columns in buildings are subjected to bending moments in addition to direct compression. These bending moments are caused by eccentricities of the application of the load, by rigidity of the connections of the girders to the columns, and by wind and other lateral forces.

The theoretical maximum extreme fiber stress,

$$s_{max} = \frac{P}{A} + \frac{Mc}{I} \qquad [7]$$

in which M is the known external bending moment. s_{max} should not exceed the unit stress given by the column formulas [4], [5], or [6], because there are also present the bending moments due to unknown, accidental eccentricities and unavoidable variations in alignment and homogeneity of the member.

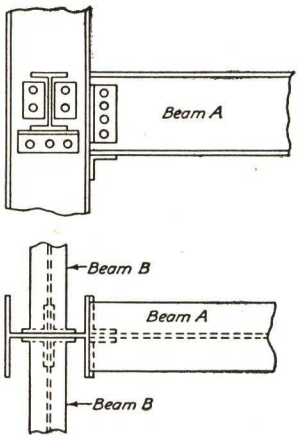

Fig. 33

33. Eccentricities of Floor Loads. The ordinary beam to column connections, such as are shown in Fig. 33, will transmit little or no bending moment from the beam to the column. Consequently it is safe to assume that the reaction from the beam A is delivered to the column at its face, or with an eccentricity of half the depth of the column. The eccentricities of the reactions of beams B are practically zero, and in this case are in opposite directions, tending to neutralize each other.

Usually columns have beams with similar eccentricities connecting to them at a number of floor levels. Since the column shaft is made continuous by its splices, the column moments are transmitted from

story to story, and each eccentric floor load affects the moments in all stories of the column.

To investigate the cumulative effect of eccentric floor loads at several floor levels, the hypothetical case is taken of a four-story column with equal loads and equal eccentricities at all floors. The reactions and

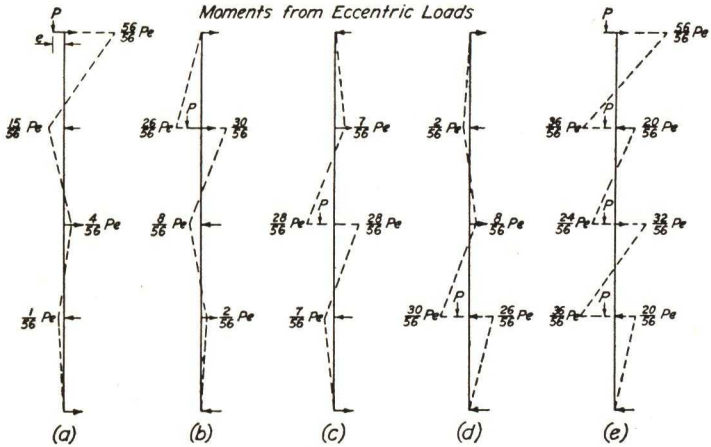

Fig. 34

bending moments for the individual floor loads are shown in Fig. 34(*a*), (*b*), (*c*), and (*d*), and the moments when all loads are acting, in Fig. 34(*e*). The dotted lines indicate the respective moment diagrams. Figure 34(*e*) may be assumed to represent conditions when dead load alone is acting.

If it is assumed that live loads may or may not be present simultaneously at the several floors, the maximum live load moments will be as follows.

Maximum moment at 4th floor = $^{56}/_{56}Pe$ when load is at 4
3rd floor = $^{37}/_{56}Pe$ when load is at 2 + 3
3rd floor = $^{43}/_{56}Pe$ when load is at 4 + 3 + 1
2nd floor = $^{40}/_{56}Pe$ when load is at 4 + 2 + 1
2nd floor = $^{36}/_{56}Pe$ when load is at 3 + 2
1st floor = $^{28}/_{56}Pe$ when load is at 3 + 1
1st floor = $^{38}/_{56}Pe$ when load is at 4 + 2 + 1

From this investigation it is seen that at no point on the column except at the top will any combination of live loads produce a moment as great as Pe.

It is common practice to design each story of a column for the bending moment Pe produced by the floor loads at the top of the story. This is evidently on the side of safety and will compensate for any moment transmitted from the beam by the rigidity of the connection, unless the connections are sufficiently rigid to render the frame continuous. Ordinary standard connections will not do this.

34. Column Schedules. In designing columns it is necessary to start at the top and proceed downward to the foundation. In order that the calculations may be readily checked and available, they are usually made in the form of a column schedule. To illustrate a convenient form for these column schedules, Fig. 24(*b*) will be taken as representing one panel of floor of a twenty-story office building. Columns A and C will be assumed to lie in the outside wall, and columns B and D to be interior columns flanked on all sides by similar panels.

The estimated floor loads are given in Art. 21, page 29, and the dead load tributary to an interior column, on page 30 of the same article. For convenience in this illustration the roof dead load will be assumed to be 75% of that of a floor. The roof live load will be taken at 40 lb per sq ft.

The story height is 12 ft floor to floor and the columns are fireproofed with lightweight concrete weighing 120 lb per cu ft covering the steel work at least 2 in. at all points. The columns are to be made in two-story lengths.

The columns are first designed for dead load and live load only. Later the wind stresses are calculated and the design revised if necessary.

The live loads contributing to the column loads at the various floor levels will be reduced in accordance with the recommendation of the U. S. Building Code Committee, given in Art. 4. Unit stresses will be used as given in the *Specifications for the Design, Fabrication and Erection of Structural Steel for Buildings* of the American Institute of Steel Construction, 1941 edition.

35. Wall Columns. In designing the wall columns the weight of the outside wall will depend upon the material of which it is constructed and the number and size of the window openings. Frequently the center line of the wall does not coincide with the center line of the columns, in which case the wall girder load is also eccentric.

In this illustration we will assume the center line of the wall to be on the center line of columns. The columns must then be fireproofed by building pilasters both inside and outside of the wall. The thickness

SCHEDULE FOR INTERIOR COLUMN *B* OR *D*

Story	Source of Load	Load	Column Section	Unit Stresses
20	Roof D.L.	32,500	8×8 WF 31# $A=9.12$	$L/r=72.0$
	Roof L.L.	16,200	$r=2.01$	Allowed =
and	20th D.L.	43,300	$12\times12=144-9=135$	14,485
	20th L.L.	32,400	$^{135}/_{144}\times120=112.5$	Req. area =
19	Col. Wt.+F.P.	3,440	31.0	8.82
		127,840	$3440=24\times143.5$	
18	19th D.L.	43,300	10×10 WF 60# $A=17.66$	$L/r=56.0$
	19th L.L.	25,920	$r=2.57$	Allowed =
and	18th D.L.	43,300	$14\times14=196-18=178$	15,480
	18th L.L.	19,440	$^{178}/_{144}\times120=148$	Req. area =
17	Col. Wt.+F.P.	4,990	60	17.10
		264,790	$4990=24\times208$	
16	17th D.L.	43,300	12×12 WF 85# $A=24.98$	$L/r=46.9$
	17th L.L.	12,960	$r=3.07$	Allowed =
and	16th D.L.	43,300	$16\times16=256-25=231$	15,935
	16th L.L.	6,480	$^{231}/_{144}\times120=192$	Req. area =
15	Col. Wt.+F.P.	6,650	85	23.69
		377,480	$6650=24\times277$	
14	15th D.L.	43,300	$14\times14\frac{1}{2}$ WF 103# $A=30.26$	$L/r=38.7$
	15th L.L.	9,720	$r=3.72$	Allowed =
and	14th D.L.	43,300	$18\frac{1}{2}\times18\frac{1}{2}=342-30=312$	16,275
	14th L.L.	6,480	$^{312}/_{144}\times120=260$	Req. area =
13	Col. Wt.+F.P.	8,710	103	30.05
		488,990	$8710=24\times363$	

of the wall will be taken as 13 in. and it will be assumed to weigh 120 lb per cu ft. Deducting for window openings the weight of the wall will be taken as 90 lb per sq ft of wall surface.

At the roof level there will be a cornice and a parapet wall. These will be assumed to weigh 750 lb per linear foot.

The pilasters are of sufficient size to cover the steel columns with at least 2 in. of fireproofing at all points. For example, the pilasters for the columns of the fifteenth and sixteenth stories will be 16 in. by 16 in. overall. This will give an increase in area over the 13 in. wall of $3 \times 16 = 48$ sq in. The area of the column is 21.16 sq in. Subtracting this from 48 sq in. gives a net increase in pilaster area of 27 sq in. The weight of this much masonry is 22.5 lb per ft. Adding the column weight of 72 lb and multiplying by the length of the column, two

stories, gives 2270 lb for the column weight plus fireproofing. These figures are shown on the column schedule.

SCHEDULE FOR WALL COLUMN *A* OR *C*

Story	Source of Load	Load	Ecc.	Column Section		Unit Stresses
	Roof D.L.	29,750		8×8 WF 33#	$A=$ 9.70	$L/r=71.3$
20	Roof L.L.	8,100			$r=$ 2.02	Allowed =
	20 W.G.D.L.	23,770	0	No Pilaster	$S=29.3$	14,535
and	20 W.G.L.L.	3,240	0			
	20 Fl. D.L.	17,320	4.03		$P/A=$	9,880
19	20 Fl. L.L.	12,960	4.03	122.0″k	$Mc/I=$	4,170
	Col. Wt.+F.P.	790		=24×33		14,050
		95,930				
	19th D.L.	41,090		10×10 WF 54#	$A=15.88$	$L/r=56.2$
	19th L.L.	12,960			$r=$ 2.56	Allowed =
18	18 W.G.D.L.	23,770	0	Pil. =1×14=14	$S=60.4$	15,470
	18 W.G.L.L.	1,940	0			
and	18 Fl. D.L.	17,320	5.06		$P/A=$	12,730
	18 Fl. L.L.	7,780	5.06	127.0″k	$Mc/I=$	2,100
17	Col. Wt.+F.P.	1,300		=24×54		14,830
		202,090				
	17th D.L.	41,090		12×12 WF 72#	$A=21.16$	$L/r=47.4$
16	17th L.L.	6,480			$r=$ 3.04	Allowed =
	16 W.G.D.L.	23,770	0	Pil. =3×16	$S=97.5$	15,910
and	16 W.G.L.L.	650	0	=48−21=27		
	16 Fl. D.L.	17,320	6.12	$^{27}/_{144}\times120=22.5$	$P/A=$	14,000
15	16 Fl. L.L.	2,590	6.12	121.8″k 72.0	$Mc/I=$	1,250
	Col. Wt.+F.P.	2,270		=24×94.5		15,250
		296,260				
	15th D.L.	41,090		14×14½ WF 87#	$A=25.56$	$L/r=38.9$
14	15th L.L.	4,860			$r=$ 3.70	Allowed =
	14 W.G.D.L.	23,770	0	Pil. =5×16½	$S=138.1$	16,265
and	14 W.G.L.L.	650	0	=82.5−25.5=57		
13	14 Fl. D.L.	17,320	7.00	$^{57}/_{144}\times120=$ 47.5	$P/A=$	15,250
	14 Fl. L.L.	2,590	7.00	139.4″k 87.0	$Mc/I=$	1,010
	Col. Wt.+F.P.	3,230		=24×134.5		16,260
		389,770				

CHAPTER VI

RIGID FRAMES UNDER VERTICAL LOADING

36. Purpose. The structural frame of a building is primarily intended to support the vertical forces due to dead and live loads.

In most building frames diagonal bracing is undesirable on account of interference with door and window openings, and with the free use of the enclosed space. Where diagonal bracing is undesirable, lateral stability is secured by rigidly connecting the girders and the columns and thus rendering the frame continuous. This continuity affects the distribution of the stresses due to vertical loads as well as lateral forces, and usually renders the stresses *statically indeterminate.*

The purpose of stress analysis is to furnish a basis for the design of the members. In a continuous frame, however, the stress distribution depends upon the relative size of the members of the frame, and consequently an accurate analysis of stresses cannot be made until the member sizes have been approximately determined. Furthermore, it is useless to spend time carrying an analysis of stresses to a higher degree of accuracy than the known uncertainties in the loads to be carried and the properties of the materials warrant.

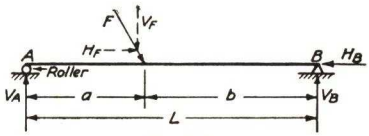

Fig. 35

37. Statical Indeterminacy. Since the term *statically indeterminate* is used frequently it is necessary that a clear definition of the term be presented. Figure 35 shows a beam supported on a knife edge at B and rollers at A. There are three unknown reaction components and three equations of equilibrium available for their determination: $\sum V = 0$, $\sum H = 0$, and $\sum M = 0$. The reactions are, therefore, statically determinate.

Consider now a beam on three supports as shown in Fig. 36(a). In this case there are four unknown reaction components, and the three equations of equilibrium must be supplemented with an additional, independent condition. This fourth condition may be supplied by equating two deflection equations. Since only one condition, in addition to the three equations of equilibrium, is necessary, the struc-

ture is said to be *indeterminate in the first degree.* Another way of finding the degree of indeterminacy is to consider how many reaction components can be removed and still have a stable structure (assuming

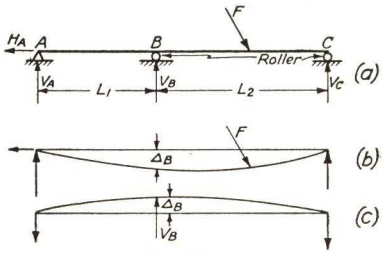

Fig. 36

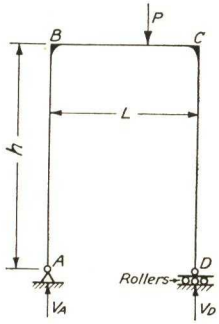

Fig. 37

that structural strength is not a factor). In this case any one of the vertical reaction components may be removed and the structure will remain stable; but only one can be removed and retain stability.

In a rigid frame a similar condition exists. Consider the simple frame shown in Fig. 37. The support of one column is hinged and

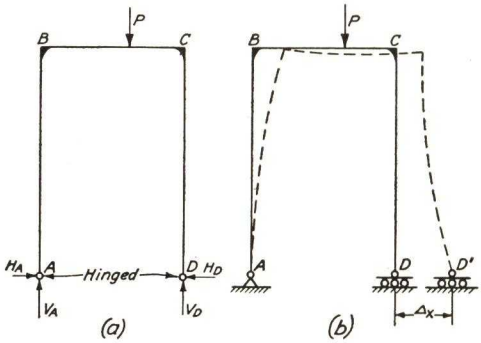

Fig. 38

the other is on rollers. Again the three equations of equilibrium are sufficient to determine the reactions and the frame is statically determinate.

If the supports of both columns are hinged, as shown in Fig. 38(*a*), there are four reaction components and the frame is statically in-

determinate in the first degree. One redundant reaction component may be removed and retain stability. If the frame has its columns restrained or fully fixed at their bases as shown in Fig. 39(*a*), the structure will be *indeterminate in the third degree.* There are six unknown reaction components, and only three equations are available from statics.

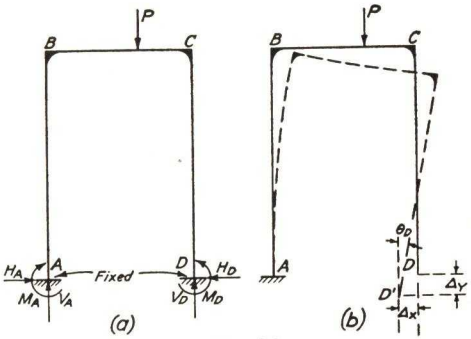

Fig. 39

38. Internal Indeterminacy. In the preceding article, indeterminacy with respect to external reactions, only, was considered. A structure may be statically determinate in regard to its reactions and indeterminate in regard to its internal moments, shears, and thrusts. The rectangular frame shown in Fig. 40(*a*) is of this type. If the frame is cut at any point, as shown in Fig. 40(*b*), there will be present, in general, three internal forces, a thrust, a shear,

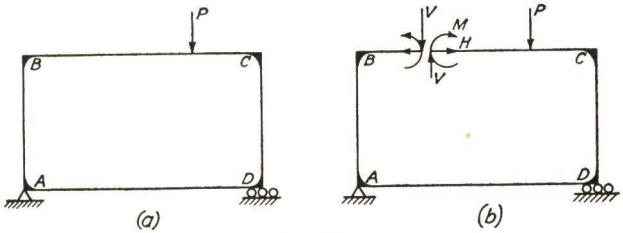

Fig. 40

and a moment. If these three forces are removed, the cut structure will be stable and statically determinate with respect to internal stresses. The original structure is, therefore, indeterminate in the third degree.

39. Methods of Analysis. The usual methods of analysis are based on the fundamental principles of the strength of materials involving the differential equation of the elastic line and the principle of area moments.

There are a number of assumptions made in the various methods of analysis, some of which are not strictly true, but the resulting errors are within the permissible limits of accuracy.

(1) The connections between the girders and columns are perfectly rigid so that the angle between the tangents to the elastic lines at their intersection does not change.*

(2) The change in the length of a member due to the direct stress in it is negligible.

(3) The lengths of the members are taken as the distances between the intersections of their neutral axes.

(4) The deflection of a member due to internal shearing stress is negligible.

In all cases the equations of statics are used in conjunction with the equations derived from the theory of elasticity.

The continuous beam of Fig. 36(*a*) is indeterminate in the first degree. If the support at B is removed, the beam deflects as shown in Fig. 36(*b*). Δ_B has a finite value that may be computed. The condition shown in Fig. 36(*a*) is that Δ_B must be zero when support B is in place. This condition may be satisfied if we compute the upward force, V_B, shown in Fig. 36(*c*), which will be necessary to cause an upward deflection at B equal to Δ_B.

The simple rigid frame shown in Fig. 38(*a*) may be solved by assuming the hinge at A to be replaced by rollers, as shown in Fig. 38(*b*). This removes the redundant horizontal reaction H_D and allows the frame to deflect horizontally an amount Δ_X. If now a horizontal force is applied at D' sufficient to bring the point back to its original position, D, this force will be the required horizontal component of the reaction at D.

If a rigid frame is fixed at the bases of the columns as shown in Fig. 39(*a*), an indeterminate structure of the third degree results. It is necessary, then, to write three equations from the theory of elasticity. If the support at D is entirely removed the structure is stable and determinate; but point D will deflect to some point D', as shown in Fig. 39(*b*). There are three components to this deflection, Δ_x, Δ_y, and θ_D. It is now only necessary to write three equations from the elastic theory to express the conditions that $\Delta_x = 0$, $\Delta_y = 0$, and $\theta_D = 0$, and solve for the three reaction components, H_D, V_D, and M_D.

In summary, the required conditions of geometry may be visualized if the redundant forces are removed. And the values of the redundant

* In steel structures some attention must be given to the type of connection needed to develop a resisting moment. Welding offers a means of obtaining a moment resisting connection in steel, having some advantages over riveted connections. In reinforced concrete the continuity of the material at the joints gives moment resistance.

forces that must be applied to restore the structure to its original condition may always be found by writing the required deflection equations.

There are many methods of handling the elastic equations and determining the values of the redundant forces. A few of them will be explained in detail.

40. Integration of Elastic Lines. The integration of the differential equations of the elastic lines of the members usually results in a number of equations involving the determination of a large number of constants of integration. For simple frames of few members the method is not unwieldly, but usually the slope deflection method or the method of moment distribution will be found more convenient and less time consuming. Since both of these are based upon the principle of area moments, which in turn is based upon the differential equation of the elastic line, the latter will be presented first.

The differential equation of the elastic line of a member subject to flexure is

$$\frac{d^2y}{dx^2} = \frac{M}{EI} \qquad [1]^*$$

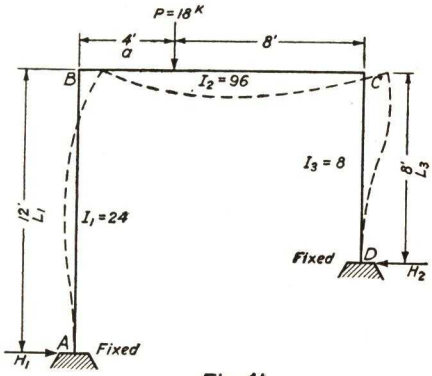

Fig. 41

In most cases for a member, E and I are constant, which greatly simplifies the integrations. The ability to sketch the flexure lines of the frame assists in keeping the signs consistent and in interpreting the results. The student should cultivate this ability.

To illustrate the method of using the equation of the elastic line, the reactions and moments in the frame shown in Fig. 41 will be determined. The dotted lines indicate the deflected form of the bent greatly exaggerated. Starting with the member AB, the forces acting on it will be as shown in Fig. 42 (a). With the origin at A, the equation of the elastic line AB is

$$\frac{d^2y}{dx^2} = \frac{M}{EI_1} = \frac{1}{EI_1}(M_A - H_1x) \qquad [2]$$

* See any textbook on strength of materials. *Strength of Materials,* by James E. Boyd, 4th Ed., p. 205.

Integrating once,

$$\frac{dy}{dx} = \frac{1}{EI_1}\,[M_A x - \tfrac{1}{2}H_1 x^2 + (C_1 = 0)] \qquad [3]$$

$$\text{when} \quad x = 0, \quad \frac{dy}{dx} = 0, \quad \text{and} \quad C_1 = 0$$

Integrating again,

$$y = \frac{1}{EI_1}\,[\tfrac{1}{2}M_A x^2 - \tfrac{1}{6}H_1 x^3 + (C_2 = 0)] \qquad [4]$$

$$\text{when} \quad x = 0, \quad y = 0, \quad \text{and} \quad C_2 = 0$$

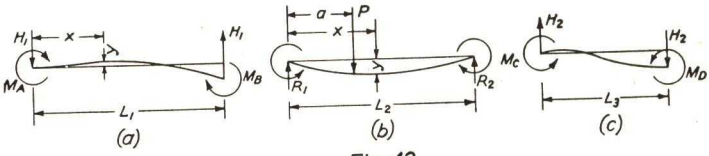

Fig. 42

Proceeding to member BC, the forces acting on it are shown in Fig. 42(b). The integration must be performed in two parts, from B to P and from P to C. Origin at B, when x is less than a,

$$\frac{d^2y}{dx^2} = \frac{1}{EI_2}\,(R_1 x - M_B) \qquad [5]$$

$$\frac{dy}{dx} = \frac{1}{EI_2}\,(\tfrac{1}{2}R_1 x^2 - M_B x + C_3) \qquad [6]$$

$$y = \frac{1}{EI_2}\,[\tfrac{1}{6}R_1 x^3 - \tfrac{1}{2}M_B x^2 + C_3 x + (C_4 = 0)] \qquad [7]$$

when $x = 0$ in [7], $y = 0$, and $C_4 = 0$

when $x = 0$ in [6], $\dfrac{dy}{dx} = \dfrac{dy}{dx}$ from [3] when $x = L_1$ and

$$C_3 = \frac{I_2}{I_1}\,(M_A L_1 - \tfrac{1}{2}H_1 L_1^2) \qquad [8]$$

When x is greater than a,

$$\frac{d^2y}{dx^2} = \frac{1}{EI_2}\,[R_1 x - M_B - P(x - a)] \qquad [9]$$

$$\frac{dy}{dx} = \frac{1}{EI_2}\,[\tfrac{1}{2}R_1 x^2 - M_B x - P(\tfrac{1}{2}x^2 - ax) + C_5] \qquad [10]$$

$$y = \frac{1}{EI_2}[\tfrac{1}{6}R_1x^3 - \tfrac{1}{2}M_Bx^2 - P(\tfrac{1}{6}x^3 - \tfrac{1}{2}ax^2) + C_5x + C_6] \qquad [11]$$

When $x = a$, $\frac{dy}{dx}$ from [6] $= \frac{dy}{dx}$ from [10],

$$C_5 = C_3 - \tfrac{1}{2}Pa^2 = \frac{I_2}{I_1}(M_AL_1 - \tfrac{1}{2}H_1L_1^2) - \tfrac{1}{2}Pa^2 \qquad [12]$$

When $x = a$, y from [7] $= y$ from [11] and

$$C_6 = \tfrac{1}{6}Pa^3 \qquad [13]$$

Proceeding now to member CD, the forces acting are shown in Fig. 42(c).

Origin at C,

$$\frac{d^2y}{dx^2} = \frac{1}{EI_3}(H_2x - M_c) \qquad [14]$$

$$\frac{dy}{dx} = \frac{1}{EI_3}(\tfrac{1}{2}H_2x^2 - M_cx + C_7) \qquad [15]$$

$$y = \frac{1}{EI_3}(\tfrac{1}{6}H_2x^3 - \tfrac{1}{2}M_cx^2 + C_7x + (C_8 = 0)] \qquad [16]$$

when $x = 0$ in [16], $y = 0$, and $C_8 = 0$

when $x = 0$ in [15], $\frac{dy}{dx} = \frac{dy}{dx}$ from [10] when $x = L_2$ and

$$C_7 = \frac{I_3}{I_2}[\tfrac{1}{2}R_1L_2^2 - M_BL_2 - PL_2(\tfrac{1}{2}L_2 - a) + C_5] \qquad [17]$$

There are four unknown moments, two unknown horizontal reactions, and two unknown vertical reactions. To determine these will require eight equations as follows:

In Fig. 41,	$\sum H = 0$	$H_1 - H_2 = 0$	[18]
In Fig. 42(b),	$\sum V = 0$	$R_1 + R_2 = P$	[19]
In Fig. 42(a),	$\sum M = 0$	$M_A + M_B - H_1L_1 = 0$	[20]
In Fig. 42(b),	$\sum M = 0$	$M_B - M_c + R_2L_2 - Pa = 0$	[21]
In Fig. 42(c),	$\sum M = 0$	$M_c + M_D - H_2L_3 = 0$	[22]

In Fig. 41, y from [4] when $(x = L_1) = y$ from [16] when $(x = L_3)$.

$$\frac{1}{I_1}(\tfrac{1}{2}M_AL_1^2 - \tfrac{1}{6}H_1L_1^3) = \frac{1}{I_2}(\tfrac{1}{6}H_2L_3^3 - \tfrac{1}{2}M_cL_3^2 + C_7L_3) \qquad [23]$$

In Fig. 42(*b*), $y = 0$ in [11] when $x = L_2$,

$$\tfrac{1}{6}R_1L_2^3 - \tfrac{1}{2}M_BL_2^2 - PL_2^2(\tfrac{1}{6}L_2 - \tfrac{1}{2}a) + C_5L_2 + C_6 = 0 \qquad [24]$$

In Fig. 42(*c*), $\dfrac{dy}{dx} = 0$ in [15] when $x = L_3$,

$$\tfrac{1}{2}H_2L_3^2 - M_cL_3 + C_7 = 0 \qquad [25]$$

The solution of these eight simultaneous equations, [18] to [25], inclusive, gives the following results:

$$M_A = 3.46'^{\mathrm{k}} \qquad R_1 = 12.29^{\mathrm{k}}$$
$$M_B = 8.32'^{\mathrm{k}} \qquad R_2 = 5.71^{\mathrm{k}}$$
$$M_C = 4.89'^{\mathrm{k}}$$
$$M_D = 2.97'^{\mathrm{k}} \qquad H_1 = H_2 = 0.98^{\mathrm{k}}$$

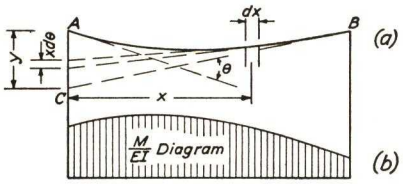

Fig. 43

41. Area Moments.* The principle of area moments stems directly from the differential equation of the elastic line, equation [1]. Let AB in Fig. 43(*a*) represent a portion of a deflected beam. CB is the tangent to the elastic line at B. The curvature is assumed to be small, and inclined distances on the diagram are assumed equal to their horizontal projections.

$$\theta = \tan\theta = \frac{dy}{dx}$$

$$\frac{d\theta}{dx} = \frac{d^2y}{dx^2} = \frac{M}{EI} \qquad [1]$$

$$d\theta = \frac{Mdx}{EI}$$

$$\theta = \int_A^B \frac{Mdx}{EI} \qquad [26]$$

This integral is the area of the M/EI diagram between the points A and B.

Principle 1. The difference in slope of the elastic line between any two points is equal to the area of the M/EI *diagram between those points.*

* See any textbook on strength of materials. *Strength of Materials,* by James E. Boyd, 4th Ed., Chaps. X and XI.

The intercept on the vertical line AC subtended by the tangents at the extremities of any length dx is $xd\theta$, and the total deflection y of the point A with respect to the tangent through B is $\int_A^B xd\theta$

$$y = \int_A^B xd\theta = \int_A^B \frac{Mxdx}{EI} \qquad [27]$$

$d\theta = \dfrac{Mdx}{EI}$ = area of the $\dfrac{M}{EI}$ diagram for the length dx and $\dfrac{Mxdx}{EI}$ is the moment of this area about the point A.

Principle 2. The deflection of any point on a beam with respect to a tangent to the elastic curve at any other point is equal to the moment of the M/EI *diagram between the two points, about the point at which the deflection is desired.*

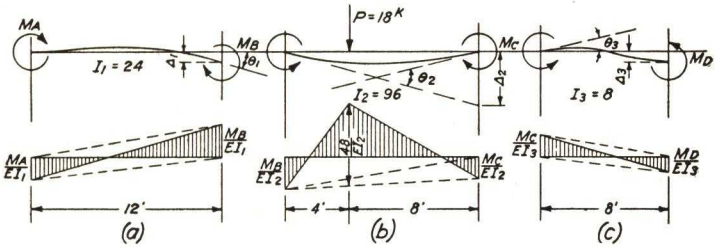

Fig. 44

When E and I are constant these areas and moment areas are very easily calculated by use of a few quickly constructed sketches. This will be illustrated by the use of the frame shown in Fig. 41. The elastic lines of the members and the respective M/EI diagrams are shown in Fig. 44. These are sketched without regard to scale. The directions of the moments are obvious from the roughly sketched flexure diagram of Fig. 41. In Fig. 44(a) the slope, θ_1, is the area of the M/EI diagram.

$$E\theta_1 = \tfrac{1}{4}M_B - \tfrac{1}{4}M_A \qquad [28]$$

The deflection of AB at B is the moment of the M/EI diagram about B.

$$E\Delta_1 = M_B - 2M_A \qquad [29]$$

In Fig. 44(b) the simple span moment at P is $48'^{k}$. This divided by EI_2 is the ordinate shown on the diagram.

The change in slope from B to C, θ_2, is the area of the M/EI diagram.

$$E\theta_2 = 3 - \tfrac{1}{16}M_B - \tfrac{1}{16}M_C \qquad [30]$$

The deflection of C with respect to the tangent at B is the moment of the M/EI diagram about C.

$$E\Delta_2 = 20 - \tfrac{1}{2}M_B - \tfrac{1}{4}M_C \qquad [31]$$

Also, from geometry,

$$\Delta_2 = L_2\theta_1 \qquad E\Delta_2 = 3M_B - 3M_A \qquad [32]$$

Similarly, in Fig. 44(*c*),

$$E\theta_3 = \tfrac{1}{2}M_C - \tfrac{1}{2}M_D \qquad [33]$$

and

$$E\Delta_3 = 1\tfrac{1}{3}M_C - 2\tfrac{2}{3}M_D \qquad [34]$$

From these slopes and deflections may be written three equations similar to equations [23], [24], and [25] of Art. 40.

$$\Delta_1 = -\Delta_3 \qquad [35]$$

$$\theta_1 + \theta_3 = \theta_2 \qquad [36]$$

and

$$\text{equation [31]} = \text{equation [32]} \qquad [37]$$

These three equations, together with the five equations, [18] to [22], inclusive, which are simple equations of equilibrium, may be solved to obtain the same results as in Art. 40.

The moment area method lends itself readily to the solution of deflections in members having variable moments of inertia. A convenient solution which permits of any conceivable variation in the moment of inertia of a member has been developed by Professor George E. Large.* This will be further referred to in Art. 45 on the moment distribution method.

42. Slope Deflection. The methods previously discussed for the analysis of rigid frames have treated moments, thrusts, and shears as unknowns. The slope deflection method treats rotations of the joints and deflections of the members as unknowns. This method was first developed in this country by Professor G. A. Maney.† The number of equations to handle is usually less than in the methods previously described, but in frames with a large number of members

* See *Trans. Am. Soc. Civil Engrs.*, Vol. 96, 1932, p. 101.

Bulletin 66, Engineering Experiment Station, Ohio State University.

† *Studies in Engineering*, No. 1, University of Minnesota, 1915, by G. A. Maney.

Bulletin 80, University of Illinois, Engineering Experiment Station, by W. M. Wilson and G. A. Maney.

Bulletin 108, University of Illinois, Engineering Experiment Station, by W. M. Wilson, F. E. Richart, and Camillo Weiss.

the solution is still very laborious. Several approximate methods, based upon the slope deflection method, have been developed, and these often yield results sufficiently close for design purposes.

In a rigid frame all the members meet at joints and, because of the interaction of members and the applied loads, the joints will rotate. The amount of rotation will depend upon the restraint offered by the connecting members. Any or all members of the frame may be loaded transversely, and any joint may be deflected relative to its original position. Therefore, a general form of equation giving the end moments on a member must include terms stating the effect of joint restraint, the effect of applied loads, and the effect of joint movements.

Before proceeding with the development of the theory, a consistent notation and sign convention must be adopted. If the members are rigidly connected at the joints, as is usually assumed, the *change in slope* of all members meeting at a joint will be the same. This will

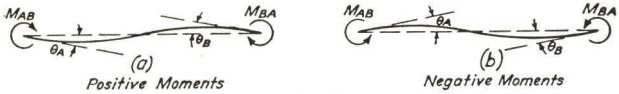

Fig. 45

be designated by the Greek letter θ, with a subscript indicating the joint, as θ_A, θ_B, etc. The *end moment* in a member will be designated by the letter M with a subscript. The first letter of the subscript indicates the end of the member at which the moment exists; as M_{AB} is the moment at A in member AB and M_{BA} is the moment at B in the same member.

There are three items to which signs are applied, and they will be considered separately. The *moments,* which are considered to be applied to the member as a free body, are shown in Fig. 45. A moment which tends to rotate the end of the member in a *clockwise* direction is *positive,* as in Fig. 45(*a*). A moment which tends to rotate the end of a member in a *counterclockwise* direction is *negative.*

The rotation of a tangent at the end of a member or the rotation of a joint is measured from the original direction of the members. A *clockwise* rotation of a tangent at the end of a member is *positive* and a *counterclockwise* rotation is *negative.* In Fig. 45(*a*), θ_A and θ_B are positive; and in Fig. 45(*b*), θ_A and θ_B are negative.

The deflection of one end of a member relative to the other end is measured perpendicular to the original direction of the axis of the member and is termed *positive* when the movement of the deflected end

is *clockwise* with respect to the other end, as shown in Fig. 46(*a*). The opposite movement of the deflected end is *negative,* as shown in Fig. 46(*b*).

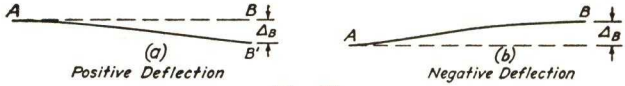

Fig. 46

The general slope deflection equations will be developed first for a member acted upon by moments at the ends only, and then the effect of bending caused by intermediate transverse loads will be

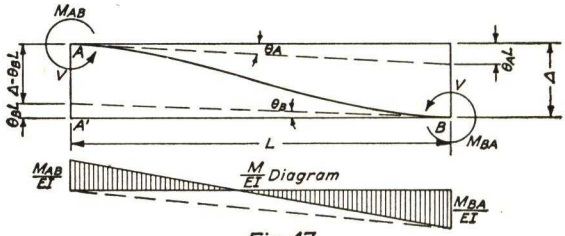

Fig. 47

added. Figure 47 shows such a member acted upon by the two negative moments M_{AB} and M_{BA} and subject to a positive deflection Δ. The moment of inertia of the beam is constant throughout its length.

From the principles of area moments

$$\Delta - \theta_A L = \frac{M_{BA}L^2}{6EI} - \frac{M_{AB}L^2}{3EI} \qquad [38]$$

Also

$$\theta_A - \theta_B = \frac{M_{AB}L}{2EI} - \frac{M_{BA}L}{2EI} \qquad [39]$$

Combining equations [38] and [39] to eliminate M_{BA},

$$M_{AB} = 2E\frac{I}{L}\left(2\theta_A + \theta_B - 3\frac{\Delta}{L}\right) \qquad [40]$$

Let $\frac{I}{L} = K$ and $\frac{\Delta}{L} = R$; then

$$M_{AB} = 2EK(2\theta_A + \theta_B - 3R) \qquad [41]$$

Similarly,

$$M_{BA} = 2EK(2\theta_B + \theta_A - 3R) \qquad [42]$$

When intermediate loads are present as well as restraining moments at the ends, as shown in Fig. 48(*a*), the M/EI diagram, Fig. 48(*c*), will

be a combination of the simple M/EI diagram, Fig. 48(b), and the M/EI diagrams of Fig. 47.

Let F = area of simple beam *moment diagram* (b),
x_1 = distance of its centroid from B.

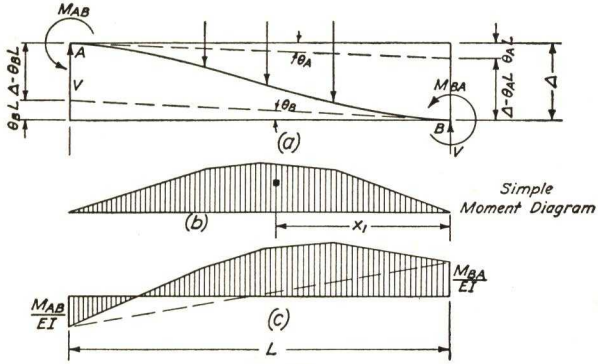

Fig. 48

Again, from the principles of area moments,

$$\Delta - \theta_A L = \frac{M_{BA}L^2}{6EI} - \frac{M_{AB}L^2}{3EI} - \frac{Fx_1}{EI} \qquad [43]$$

$$\theta_A - \theta_B = \frac{M_{AB}L}{2EI} - \frac{M_{BA}L}{2EI} + \frac{F}{EI} \qquad [44]$$

Combining equations [43] and [44],

$$M_{AB} = 2EK(2\theta_A + \theta_B - 3R) - \frac{2F}{L}\left(\frac{3x_1}{L} - 1\right) \qquad [45]$$

$$M_{BA} = 2EK(2\theta_B + \theta_A - 3R) - \frac{2F}{L}\left(\frac{3x_1}{L} - 2\right) \qquad [46]$$

Equations [45] and [46] are identical with [41] and [42] except that they contain an additional term which is dependent solely upon the intermediate loads.

Referring again to the frame of Fig. 41 and Fig. 44,

$$\theta_A = 0, \quad \theta_D = 0, \quad R_2 = 0, \quad F = 288, \quad x_1 = 6\tfrac{2}{3}\text{ ft}$$

$$\text{At joint } B, \quad M_{BA} + M_{BC} = 0 \qquad [47]$$

$$\text{At joint } C, \quad M_{CB} + M_{CD} = 0 \qquad [48]$$

$$\sum H = 0, \quad H_1 + H_2 = 0$$

$$H_1L_1 = M_{AB} + M_{BA} \qquad H_3L_3 = M_{CD} + M_{DC}$$

$$\frac{M_{AB} + M_{BA}}{L_1} + \frac{M_{CD} + M_{DC}}{L_3} = 0 \qquad [49]$$

Deflections, $\Delta_1 - \Delta_3 = 0$

$$R_1L_1 - R_3L_3 = 0 \qquad [50]$$

Substituting the slope deflection equivalents for the moments,

$$2EK_1(2\theta_B + \theta_A - 3R_1) + 2EK_2(2\theta_B + \theta_C - 3R_2) - \frac{2F}{L_2}\left(\frac{3x_1}{L_2} - 1\right) = 0 \qquad [47]$$

$$2EK_2(2\theta_C + \theta_B - 3R_2) - \frac{2F}{L_2}\left(\frac{3x_1}{L_2} - 2\right) + 2EK_3(2\theta_C + \theta_D - 3R_3) = 0 \qquad [48]$$

$$\frac{2EK_1}{L_1}(2\theta_A + \theta_B - 3R_1) + \frac{2EK_1}{L_1}(2\theta_B + \theta_A - 3R_1) + \frac{2EK_3}{L_3}(2\theta_C + \theta_D - 3R_3) + \frac{2EK_3}{L_3}(2\theta_D + \theta_C - 3R_3) = 0 \qquad [49]$$

Substituting numerical values,

$$K_1 = 2 \qquad K_2 = 8 \qquad K_3 = 1$$
$$F = 288 \qquad x_1 = 6\tfrac{2}{3}$$

$$40\theta_B + 16\theta_C - 12R_1 = \frac{32}{E} \qquad [47]$$

$$16\theta_B + 36\theta_C - 6R_3 = -\frac{16}{E} \qquad [48]$$

$$\theta_B + \tfrac{3}{4}\theta_C - 2R_1 - \tfrac{3}{2}R_3 = 0 \qquad [49]$$

$$R_3 = \tfrac{3}{2}R_1 \qquad [50]$$

Solving these four equations gives

$$\theta_B = +\frac{1.2179}{E}, \quad \theta_C = -\frac{0.9563}{E}, \quad R_1 = +\frac{0.1178}{E}, \quad R_3 = +\frac{0.1767}{E}$$

From which,

$$M_{AB} = 3.46'^{k} \qquad M_{BA} = M_{BC} = 8.33'^{k}$$
$$M_{DC} = 2.97'^{k} \qquad M_{CB} = M_{CD} = 4.89'^{k}$$

These values check with the values found in the other two solutions and the labor involved is very greatly reduced.

43. Moment Distribution. The method of moment distribution was first published by Professor Hardy Cross* in May, 1930, although he had been teaching the method to his students for several years previously. Concerning this method, Professor W. M. Wilson of the University of Illinois said:

> The moment distribution method is a distinct addition to the tools of the engineer. The ease and rapidity with which the moments can be determined subordinates the mathematical processes and leaves the engineer free to concentrate upon the behavior of the structure. It is a tool for the engineer as distinguished from the mathematician.

The moment distribution method is a method of determining the moments at the joints by a series of successive approximations involving only the simplest arithmetic. Any desired degree of accuracy may be attained by increasing the number of approximations or cycles. Usually three or four cycles will give satisfactory results.

In any beam or frame with rigid joints, carrying loads, there is a tendency for the joints to rotate, and in some cases also to move from their original positions. These movements are shown, greatly exaggerated, in Fig. 41. The fundamental concept of the method is that all joints of the structure are held by some artificial means so that all movements are prevented. Then the joints are released successively, and the resulting moments which are generated by the motion of each joint when released are evaluated. Before describing the method in detail, it will be necessary to develop a few fundamental relationships.

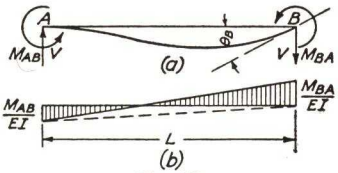

Fig. 49

When a beam, fixed at one end, is acted upon by a moment at the other, as shown in Fig. 49, a moment is generated at the fixed end. When the moment of inertia of the beam is constant from end to end, the amount of this moment carried over from the rotating end to the fixed end may be determined from equations [41] and [42].

$$\theta_A = 0 \qquad R = 0$$

$$M_{AB} = 2EK\theta_B$$

$$M_{BA} = 4EK\theta_B$$

Therefore,

$$M_{AB} = \tfrac{1}{2}M_{BA} \qquad [51]$$

* *Trans. Am. Soc. Civil Engrs.*, Vol. 96, 1932, p. 1.

See also *Continuous Frames of Reinforced Concrete*, by Hardy Cross and N. D. Morgan, Chap. IV.

The coefficient of M_{BA} is called the *carry over factor*, and for members with constant moment of inertia is ½. It will be noted that the sign of the moment carried over is the same as that of the generating moment.

When several members meet at a rigid joint as shown in Fig. 50, the total moment tending to rotate the joint will be divided among the members in proportion to their respective stiffnesses.

Let M_B = total rotating moment at the joint,

$$M_B = M_{BA} + M_{BC} + M_{BE} + M_{BD} \qquad [52]$$

and, from equation [42],

$$M_{BA} = 4EK_1\theta_B \qquad M_{BC} = 4EK_2\theta_B$$

$$M_{BE} = 4EK_3\theta_B \qquad M_{BD} = 4EK_4\theta_B$$

From these equations it is seen that the moments carried by the members are proportional to the respective $K = \dfrac{I}{L}$ values. K is therefore termed the *stiffness factor*.

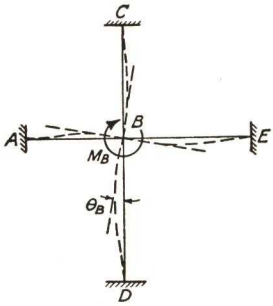

Fig. 50

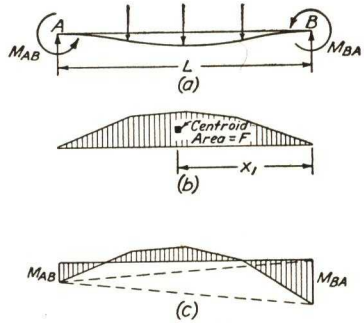

Fig. 51

Because the assumed condition of the structure at the start of the solution is with all joints locked in their neutral positions, the initial moments in the members will be the fixed end moments. Figure 51(*a*) shows a fixed end beam carrying a group of loads.

The simple moment diagram and the fixed end moment diagram are shown in Fig. 51(*b*) and (*c*).

From the principles of area moments, as the tangent is horizontal at each end, the area of the combined moment diagram is zero. Also as the deflection of B with respect to the tangent at A is zero, the moment

of the diagram about B is zero.

$$F - \frac{M_{AB}L + M_{BA}L}{2} = 0 \qquad [53]$$

$$Fx_1 - \frac{M_{BA}L^2}{6} - \frac{M_{AB}L^2}{3} = 0 \qquad [54]$$

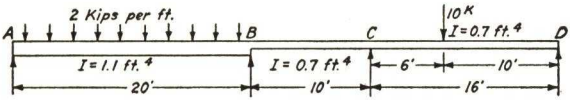

Fig. 52

Solving these two equations, the fixed end moments are

$$M_{AB} = \frac{6Fx_1}{L^2} - \frac{2F}{L} \qquad [55]$$

$$M_{BA} = \frac{4F}{L} - \frac{6Fx_1}{L^2} \qquad [56]$$

To illustrate the method of moment distribution the three-span continuous beam of Fig. 52 will be used.

(*a*) Visualize the girder as three flexible members connected by rigid joints, as shown in Fig. 53, which are locked in a position such that the

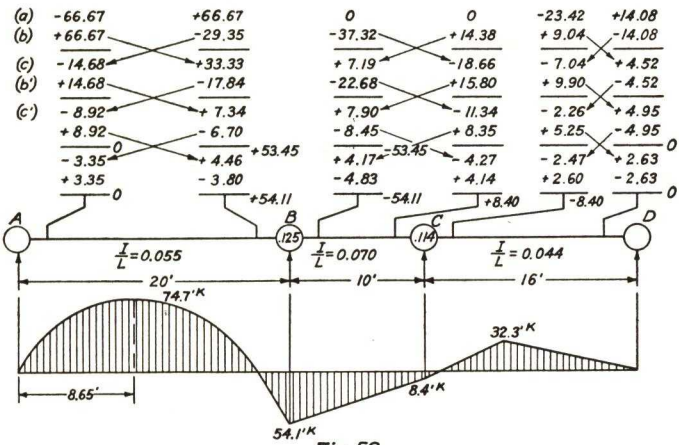

Fig. 53

tangent to the elastic curve at the joint is horizontal. In line (*a*) write above the end of each member the *fixed end* resisting moment due to the loadings imposed. These are obtained from equations

[55] and [56]. Clockwise moments upon the ends of the members are considered positive.

(*b*) If now the joint B is released, it will tip counterclockwise and have no turning moment upon it because it is free to rotate. The $66.67'^{k}$ is now resisted by flexure in members BA and BC, it being distributed to each in proportion to its *stiffness factor*, I/L. The total stiffness of a joint is the sum of the stiffnesses of all the members meeting at the joint and is written inside the joint (as shown 0.125 for joint B and 0.114 for joint C). The other joints are released and balanced successively and the balancing moments written in line (*b*). The line drawn under the moment indicates that the joint at that time is in balance.

(*c*) As shown in Fig. 49, when joint B was released the initial fixed end conditions at A and at C were disturbed. Half of the induced moment -29.35 at B is carried over to A and half of -37.32 is carried over to C. These carry over moments are shown in line (*c*).

(*d*) The joints are now again in a state of unbalance and the unbalanced moments must again be distributed in the same manner as line (*b*). At joint B, for example, the unbalanced moment is $+33.33 + 7.19 = +40.52$. This moment is distributed $\frac{0.055}{0.125} \times 40.52 = 17.84$ to member BA and $\frac{0.070}{0.125} \times 40.52 = 22.68$ to member BC. These are set down with signs reversed in line (*b'*), striking a new balance.

The moment upon the end of any member at any stage of the process is the algebraic sum of the items then tabulated. When a cycle of carrying over and distributing changes the total by an amount so small as to be negligible in design, the process is discontinued. After the end moments are known the reactions and moment diagrams may be obtained by statics. The total moments at the end of the third and fourth cycles are shown in Fig. 53. A slope deflection solution gives results as shown below.

Slope deflection	$M_B = 54.19'^{k}$	$M_C = 8.26'^{k}$
Moment distribution (4 cycles)	$M_B = 54.11$	$M_C = 8.40$

44. Moment Distribution — Side Sway. In any unsymmetrical frame, or in any symmetrical frame with unsymmetrical loading there will be a side sway. The joints will not remain fixed in position as in the problem of Art. 43. In these cases the joints must be balanced both for *rotation* and *position*, or in other words the shears must be balanced as well as the moments.

Take the case of the frame shown in Fig. 54. If all the joints are locked against both *rotation* and *translation,* the fixed end moments, from equations [55] and [56], in the member BC will be $23.42'^{k}$ at B and $14.08'^{k}$ at C. The moments in the members AB and CD are all zero. These are all entered as items (a) in the moment distribution diagram, Fig. 55. Joints B and C are now released for rotation, as in the solution of Art. 43, and the moments carried over. This gives items (b) and (c) at the end of each member. As the ends A and D are assumed fixed by construction, they are never released for rotation.

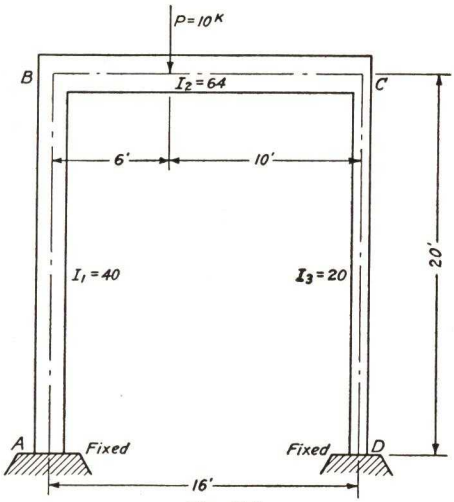

Fig. 54

In member AB the total moment is now $+3.90$ at A and $+7.81$ at B. As these are both positive, the resultant shear in the member is their sum divided by the length of the member, 20 ft. Shear $= +0.58$. Similarly, for member CD the shear is -0.21. As there are no other horizontal forces it is evident that a residual horizontal force must exist at joints B and C by virtue of their being locked in position. If now they are released *for horizontal motion,* the unbalanced shear will be distributed between the two vertical members. Since the two joints B and C must deflect equally, the moments due to the unbalanced shear will be divided between the members in proportion to their respective stiffnesses, and, as there is assumed to be no rotation of the joints during this adjustment, the moments will be equally divided between the top and bottom of each member. These moments are set down as items (d), and opposite these are set down the total moments at the ends of the members. It will be found that the total moments at joints B and C are now unbalanced and must again be released and balanced. This process may be carried through as many cycles as is deemed necessary. After the fourth shear balance the total moments at joints B and C are still slightly unbalanced.

When a frame has legs of different length, as in Fig. 41, the shear balance is not distributed between the two legs in proportion to their I/L values.

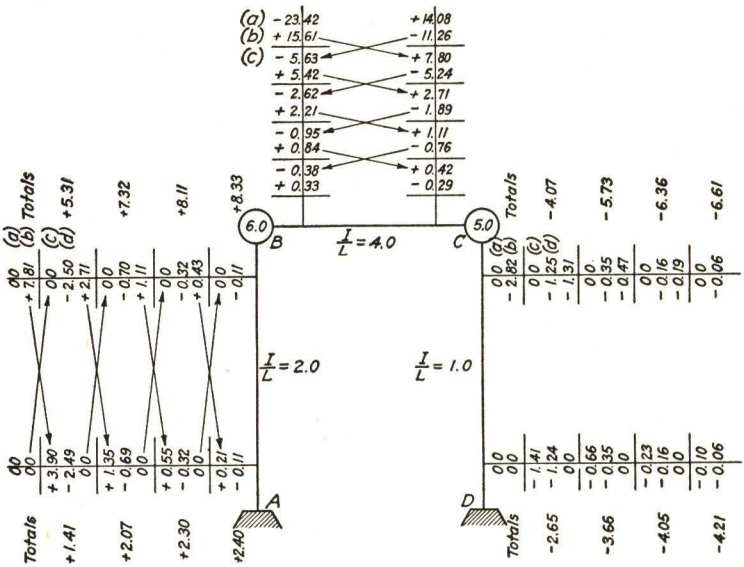

Fig. 55

Let m_1 = moment correction at ends of AB.
m_3 = moment correction at ends of CD.

Since the deflections of the two legs must be equal and the ends of the members are locked against rotation, making the moment corrections at the two ends of the member equal, from moment area principle 2, Art. 41,

$$E\Delta = \frac{m_1 L_1^2}{6I_1} = \frac{m_3 L_3^2}{6I_3} \quad \text{or} \quad \frac{m_1}{m_3} = \frac{I_1 L_3^2}{I_3 L_1^2} \qquad [a]$$

The shear on a member without intermediate loads is equal to the sum of the two end moments divided by the length of the member. And, since the total shears in the two legs must balance,

$$\frac{2m_1}{L_1} + \frac{2m_3}{L_3} + \frac{M_A + M_B}{L_1} + \frac{M_C + M_D}{L_3} = 0 \qquad [b]$$

After the first moment balance and carry over in Fig. 56,

$$M_A = +3.2, \quad M_B = +6.4, \quad M_C = -1.78 \quad \text{and} \quad M_D = -0.89$$

From equation [a],

$$\frac{m_1}{m_3} = 4/3$$

From equation [*b*],

$$\frac{m_1}{6} + \frac{m_3}{4} + 0.466 = 0$$

Solving these equations,

$$m_1 = -1.315 \qquad m_3 = -0.988$$

The complete solution for six cycles is shown in Fig. 56.

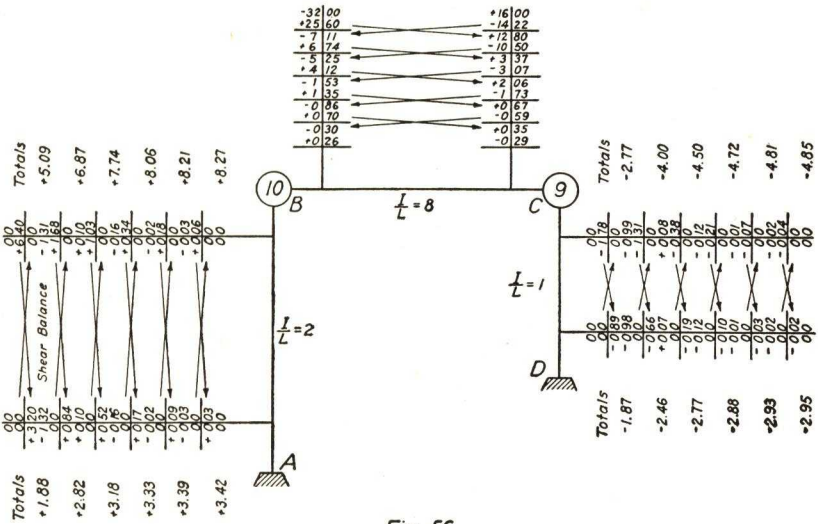

Fig. 56

45. Variable Moment of Inertia. If the moment of inertia of a member is not constant throughout its length the *fixed end moments, carry over,* and *stiffness factors* will be different from those found for members with uniform cross section. In comparatively few cases is it feasible to write the equation of moment of inertia variation and perform the necessary integrations to find the required constants mentioned above.

The method here presented was developed by Professor George E. Large* and permits of any conceivable variation of the moment of inertia of a member.

When a member is unsymmetrical about its center line there will be different stiffness and carry over factors for the two ends. After the *fixed end moments, carry over,* and *stiffness factors* are determined,

* *Trans. Am. Soc. C. E.,* Vol. 96, 1932, p. 101.
See also *Bulletin* 66, Engineering Experiment Station, Ohio State University.

the moment distribution solution is made in the same manner as previously described.

Figure 57 (*a*) represents a beam of variable cross section involving complete dissymmetry.

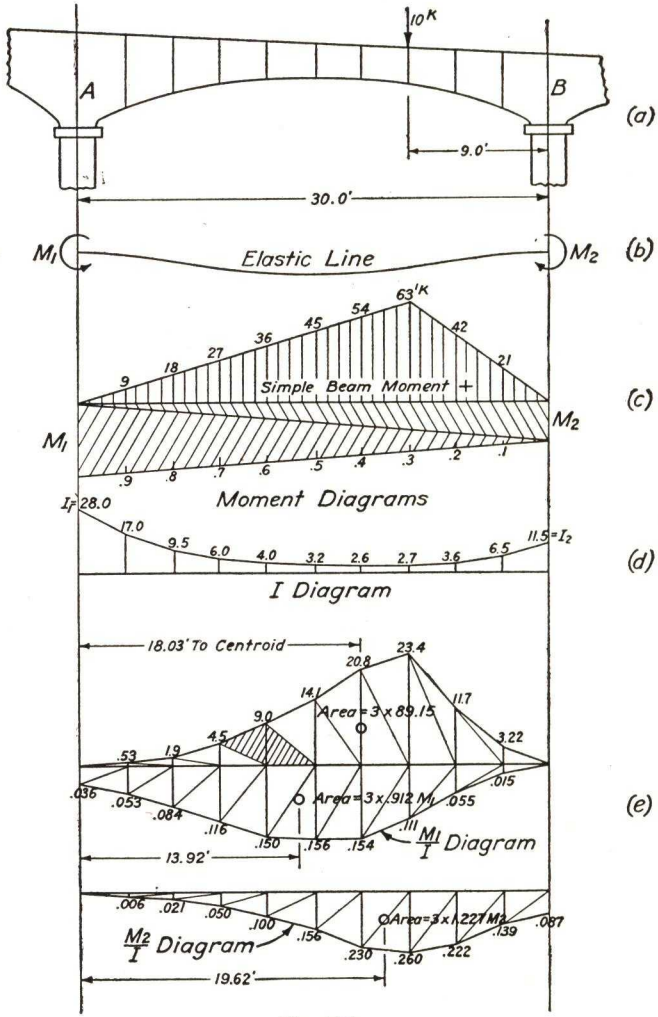

Fig. 57

Fixed End Moments. Let M_1 and M_2 be the unknown fixed end moments, Fig. 57 (*b*). It is convenient to construct the three moment diagrams separately as shown in Fig. 57 (*c*), the positive simple moment diagram, and the two negative moment diagrams for M_1 and M_2.

When the ordinates to these three diagrams at any point are added algebraically, the net bending moment due to loading and restraint is obtained.

Knowing the moment of inertia variation as shown in Fig. 57(*d*), the three M/I diagrams may be sketched, keeping the three portions separate as was done in the moment diagrams (*c*). Unless there is

Arm from Left End to Center of Area	Positive M/I		M_1/I		M_2/I	
	Ordinate	Moment	Ordinate	Moment	Ordinate	Moment
1.0	——	——	$0.018M_1$	$3\times0.018M_1$	——	——
3.0	0.53	1.6×3	$0.053M_1$	$3\times0.159M_1$	$0.006M_2$	$3\times0.018M_2$
6.0	1.90	11.4×3	$0.084M_1$	$3\times0.504M_1$	$0.021M_2$	$3\times0.126M_2$
9.0	4.50	40.5×3	$0.116M_1$	$3\times1.045M_1$	$0.050M_2$	$3\times0.450M_2$
12.0	9.00	108.0×3	$0.150M_1$	$3\times1.800M_1$	$0.100M_2$	$3\times1.200M_2$
15.0	14.10	211.6×3	$0.156M_1$	$3\times2.340M_1$	$0.156M_2$	$3\times2.340M_2$
18.0	20.80	375.0×3	$0.154M_1$	$3\times2.772M_1$	$0.230M_2$	$3\times4.145M_2$
21.0	23.40	491.7×3	$0.111M_1$	$3\times2.332M_1$	$0.260M_2$	$3\times5.462M_2$
24.0	11.70	281.0×3	$0.055M_1$	$3\times1.321M_1$	$0.222M_2$	$3\times5.334M_2$
27.0	3.22	87.0×3	$0.015M_1$	$3\times0.405M_1$	$0.139M_2$	$3\times3.756M_2$
29.0	——	——	——	——	$0.043M_2$	$3\times1.248M_2$
Area Moment	3×89.15	3×1607.8	$3\times0.912M_1$	$3\times12.696M_1$	$3\times1.227M_2$	$3\times24.079M_2$
Distance of Centroid from Left	$\frac{1607.8}{89.15} = 18.03'$		$\frac{12.696}{0.912} = 13.92'$		$\frac{24.079}{1.227} = 19.62'$	

some reason for not doing so, the beam should be divided into a number (10 in this case) of equal sections. This will greatly facilitate the calculations. The area under each curve of the M/I diagrams is found by a summation of the individual trapezoids. Moments of the areas and the three centroids are determined.

To find the moment of the area draw diagonal lines subdividing the trapezoids into pairs of triangles with a common vertical side. The areas of two such triangles (shown shaded) are equal, and their centroids are equidistant from the common ordinate. Therefore, the moment of the pair is equal to the ordinate times the base, times the distance of the ordinate from the axis of moments.* The table shows the necessary calculations.

By the first principle of area moments, Art. 41, the algebraic sum of the M/I areas must equal zero.

$$3 \times 89.15 - 3 \times 0.912M_1 - 3 \times 1.227M_2 = 0$$

* This method was suggested to the authors by Mr. R. E. Peck, Associate Member of the American Society of Civil Engineers, St. Louis, Mo.

By the second principle of area moments the algebraic sum of the moments of the M/I areas about the left end of the member must also equal zero.

$$3 \times 1607.8 - 3 \times 12.696M_1 - 3 \times 24.079M_2 = 0$$

Solving these two equations simultaneously, the fixed end moments are found to be

$$M_1 = 27.25'^{k} \qquad M_2 = 52.41'^{k}$$

Carry Over Factor. The *carry over factor* is defined as the ratio of the moment at the fixed end to the moment producing rotation at the rotated end. For members of uniform cross section this was shown to be ½. See Art. 43, Fig. 50. The rotated end corresponds to the joint just released for moment distribution, whereas the fixed end is the remote end of the member. Unsymmetrical members have two carry over factors, depending upon which end is rotated.

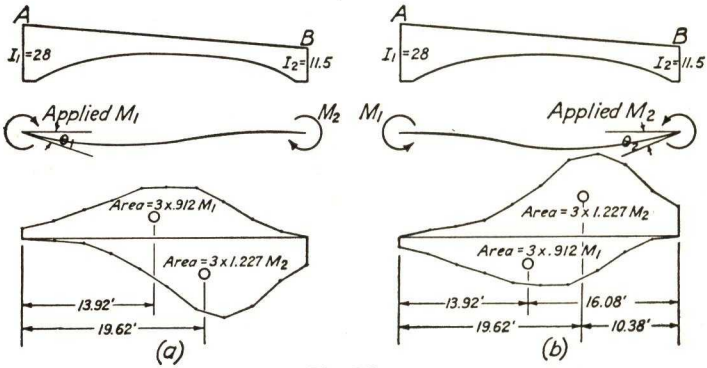

Fig. 58

Referring to Fig. 58(a), the problem is to find the fixed end moment at B in terms of the applied moment at A. The M/I curves for M_1 and M_2 have already been determined in Fig. 57 and their areas and centroids calculated. The algebraic sum of the moments of the M/I areas about A must be zero, as the deflection of A with respect to the tangent at B is zero.

$$3 \times 0.912M_1 \times 13.92 - 3 \times 1.227M_2 \times 19.62 = 0$$

From this equation, $M_2 = 0.529M_1$ and the *carry over factor* from the left end to the right is 0.529.

Similarly, by rotating the right end and holding the left end fixed, as shown in Fig. 58(b), the algebraic sum of the areas about B is zero.

$$3 \times 1.227M_2 \times 10.38 - 3 \times 0.912M_1 \times 16.08 = 0$$

From this equation, $M_1 = 0.867M_2$ and the *carry over factor* from the right end to the left is 0.867.

Stiffness Factor. The stiffness of a member is measured by the amount of moment necessary to rotate its end through a unit angle when the other end is held fixed. For members of uniform cross section the stiffness was shown to be proportional to I/L. See Art. 43, Fig. 50.

As in the case of the carry over factor, the stiffness factors for the two ends of an unsymmetrical member will be different. Since I is variable, the moment of inertia at some definite point of the member must be used for reference. In this case the value at the left end, I_1, will be used and the *stiffness factor* will equal $k\frac{I_1}{L}$, in which k is a constant to be determined for each end of the member.

Again referring to Fig. 58(a),

$$E\theta_1 = \text{area of the } \frac{M}{I} \text{ diagrams}$$

In equation [52], Art. 43, for members of uniform section this was found to be

$$E\theta = \frac{ML}{4I}$$

In this case

$$E\theta_1 = \frac{M_1L}{4k_1I} = 3(0.912M_1 - 1.227M_2) = \frac{M_1 \times 30}{4k_1 \times 28}$$

When the right end is fixed, as in Fig. 58(a), $M_2 = 0.529M_1$, as calculated in determining the carry over factor. Substituting this value of M_2 and solving, $k_1 = 0.34$, and the *stiffness factor* for the left end is $0.34I_1/L$.

Similarly, by using Fig. 58(b), $k_2 = 0.205$, and the *stiffness factor* for the right end is $0.205I_1/L$.

46. A Roof Frame. The roof frame shown in Fig. 59 may be solved by moment distribution, but corrections must be made for joint translation as was done in the bent of Art. 44.

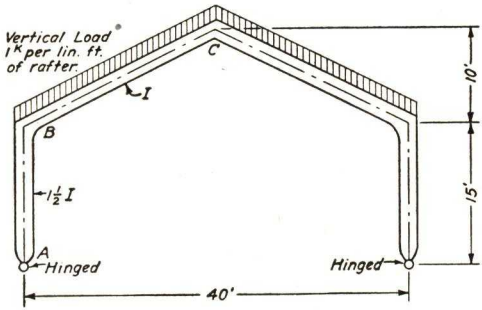

Fig. 59

The load is one kip, vertical, per linear foot of rafter. First the moment distribution for the frame is carried through with the joints

fixed in position, but allowed to rotate. This solution is presented in Fig. 60.

The moments indicated in Fig. 60 are not final, as joints B, C, and D were assumed fixed in location. By moments about C, as shown

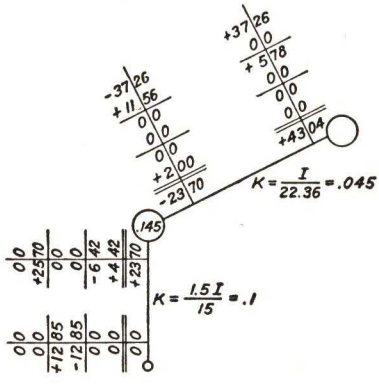

Fig. 60

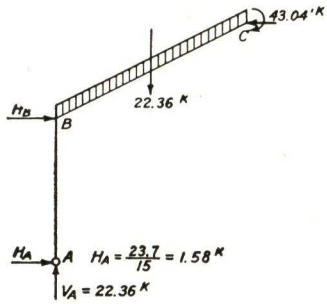

Fig. 61

in Fig. 61, the necessary force at B (and D) to prevent translation is found to be

$$H_B = \frac{43.04 + 22.36 \times 10 - 1.58 \times 25}{10} = 22.71^{\text{k}}$$

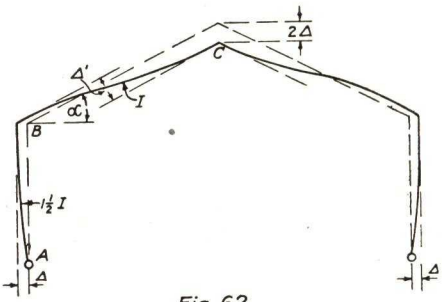

Fig. 62

If the force H_B is removed, the frame will deflect as shown in Fig. 62. The vertical deflection of the point C will be approximately $\dfrac{\text{span}}{2 \times \text{rise}} \times \Delta$. In this case it will be 2Δ.

If the joints B, C, and D are not allowed to rotate when H_B is removed, the shears in the members, and from these the end moments, may be calculated.

The deflection of the rafter is Δ' and

$$\Delta' = 2\Delta \cos \alpha + \Delta \sin \alpha$$

In this case

$$\Delta' = (2 \times 0.895 + 0.447)\Delta = 2.24\Delta$$

As Δ is unknown, the solution must be by approximations.

Suppose that the shear produced in the member AB by the deflection Δ is 5.0^{k}. Then

$$M_{BA} = M_{AB} = 5.0 \times 7.5 = 37.5'^{k} \quad \text{(all joints rigid)}$$

$$\Delta = \frac{5(7.5)^3 \times 2}{3E \times 1\tfrac{1}{2}I}$$

For member BC,

$$2.24\Delta = \frac{S(11.18)^3 \times 2}{3EI}$$

Equating the values of Δ,

$$S_{BC} = 0.451 \times 5 = 2.254^{k}$$

$$M_{CB} = M_{BC} = 2.254 \times 11.18 = 25.20'^{k}$$

Using these induced moments and distributing, the resulting moments are as shown in Fig. 63.

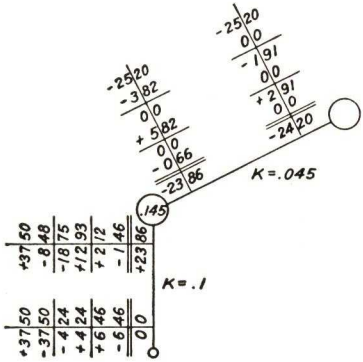

Fig. 63

Referring again to Fig. 61,

$$M_C = 43.04 - 24.20 = 18.84'^{k}$$

$$H_A = 1.58 + \frac{23.80}{15} = 3.17^{k}$$

and, by moments about C,

$$H_B = \frac{18.84 + 22.36 \times 10 - 3.17 \times 25}{10} = 16.32^{k}$$

Increasing the shear in the member AB by 5.0 kips reduced H_B by $22.71 - 16.32 = 6.39^{k}$. Therefore, by proportion, the shear in AB should increase.

$$\frac{22.71}{6.39} = \frac{\text{Shear}}{5.0} \qquad \text{Shear} = 17.77^{k}$$

This will increase the moments in Fig. 63 by $\dfrac{17.77}{5.00} = 3.55$ times.

Adding these to the moments of Fig. 60 gives

$$M_{BA} = M_{BC} = 23.70 + 3.55 \times 23.86 = 108.40'^{k}$$
$$M_{CB} = -43.04 + 3.55 \times 24.20 = 42.87'^{k}$$

$$H_A = \frac{108.40}{15} = 7.23^{k}$$

Referring again to Fig. 61 and taking moments about C,

$$H_B = \frac{-42.87 + 22.36 \times 10 - 7.23 \times 25}{10} = 0.0$$

This checks the above results.

47. Many-Storied Building Frames. The preceding articles of this chapter have given theoretical methods of analysis of continuous frames which can be used for determining moments, shears, and direct stresses when the relative stiffnesses of the members of the frame are known. Building frames usually consist of a large number of members and are very much more complex than the simple frames used as illustrations. It is also true, however, as stated in Art. 36, that great accuracy in the determination of the stresses is not necessary because of the uncertainties in the loads to be carried and the properties of the materials.

In many-storied, many-paneled frames the effect of loads far removed from the member in question upon the stresses in that member is small.

Professor F. E. Richart of the University of Illinois has presented the results of " A Study of Bending Moments in Columns " in a paper read before the American Concrete Institute in February, 1924, and printed in the *Proceedings* of the Institute, Volume XX, page 495. The following discussion and the accompanying diagrams are taken largely from Professor Richart's paper.

It is obvious that the wall column must always be subject to an unbalanced moment due to floor loads. The magnitude of the moment in the column depends upon the relative sizes of the columns and girders in the immediate vicinity, and the position of the live load. Figure 64 shows the skeleton framework of a bent with live loads indicated on those panels producing a maximum moment in the column AG, just below A and above G. Since more than 90% of this moment is produced by loads on the two adjacent spans AB and GH, and since the loading of these two spans is much more likely to occur

than that of the arrangement shown in Fig. 64, the case of a live load on the two spans AB and GH only has been used in the following studies.

Coefficients for the moments in the girders and column in terms of the full fixed end moment in the girder ($wL^2/12$ for uniform load) have been worked out for varying ratios of column stiffness to girder stiffness. ($K = I/L$, see Art. 42.) Values of these coefficients are shown in the curves of Fig. 65.

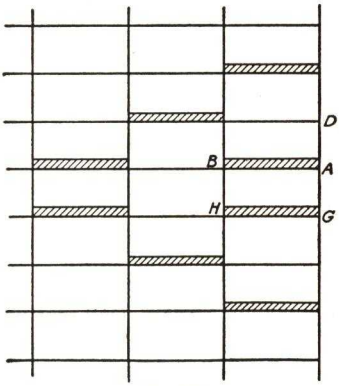

Fig. 64

These curves were derived for equal panels and equal stories but will apply, with sufficient accuracy, to frames of usual proportions. In these solutions K is the ratio of the moment of inertia of the member to its length, and r is the ratio of the K of the column above to the K of the column below the girder at the floor under consideration. The ratio of the K of the column to the K of the girders is determined by using the average of the column K's above and below the girder. The upper set of curves in Fig. 65 may be used for live loads and the lower set for dead loads. The moment at the end of the girder is equal to the sum of the moments in the column above and below it.

The moment in a column at the roof level can be determined by the same procedure as at other floors. Thus, in taking the average of K for the column above and below the roof level, since there is no column above, the average value is obviously one-half the value of K for the column below. The coefficient of moment in roof columns is generally greater than at other floor levels, for whereas the single column does not offer as great an end restraint and hence does not attract as great a proportion of the full negative moment as would two columns, still this moment must all be carried by the one column.

The dotted curves for moments in the lower column have been drawn with abscissas magnified 10 times for use with ratios of K of columns to K of girders less than 1.0.

The exterior columns of a building must be proportioned to carry the direct stress due to loads on all adjacent spans and the bending stress produced by the unbalanced floor loads. For the upper stories of a building, in which the direct load on the columns may be relatively

small, the bending stresses are of greater importance than in the lower stories.

Bending moments in interior columns are generally not of particular importance, since, if adjacent spans are equal and all spans

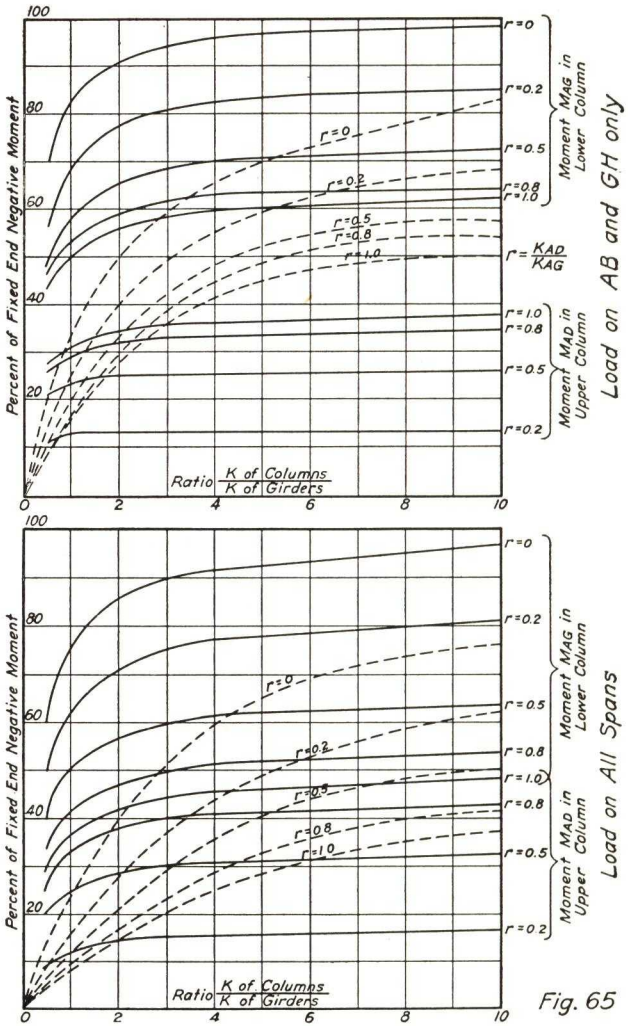

Fig. 65

are loaded, the floor loads are balanced and there is no moment produced on the column. In the case of equal spans the dead load is always balanced and it is largely balanced with the usual unequal spans. Also the dead load usually far exceeds the live load in magnitude.

When the spans or loads are greatly unbalanced a good approximation of the column moment may be obtained by using the curves of Fig. 65 in connection with the difference in girder moments on the two sides of the column.

For highly irregular bents one of the more exact solutions given in the earlier part of this chapter may be used.

CHAPTER VII

WIND BRACING

The following is a quotation from an address delivered by Professor Hardy Cross at Cambridge, Mass., September 16, 1938, given with his permission.

> Often, many assumptions as to stress distribution may be equally good. Here it is quite as scientific to proceed from a solution of stresses to a consideration of assumptions compatible with them as to proceed from fixed assumptions to a mathematical solution.
>
> Recognizing all the dangers of such terminology, we may still say that we are trying to think as the structure thinks — an ideal that we ever pursue and never quite grasp. And this is a structure in the field, not one on a drafting board or in a laboratory. It will try to do what the designer has asked it to do if the designer has been at all reasonable; it has been said, you know, that God is on the side of the erring engineer.

48. Effective Bracing. In any building design consideration must be given to the tendency of the lateral forces to distort the structure or even to overturn it. The lowest frame buildings require bracing to keep them upright, and the problem is accentuated with increase in height to width ratio. Quoting from the *Final Report* of the Committee on Wind Bracing,*

> Proper design of wind bracing involves provision for stability, strength and rigidity. The relative importance of these three factors varies considerably, but adequate consideration must be given to each.
>
> The frame of a building is made up, in general, of vertical members (columns) and horizontal members framed between the verticals (beams and girders). In tier buildings the horizontal members of the floors occur at fairly regular intervals throughout the height and, with the floor slabs, form horizontal diaphragms uniting the columns at each floor level. The purpose of the wind bracing is to preserve this frame from undue distortion when subjected to horizontal forces.
>
> In a building frame as described, the tendency of the panels formed by the columns and their connecting beams or girders to distort, due to horizontal thrust, is resisted by the connections at the columns and by the members in bending and direct stress. Where several columns occur in a line, they form a bent which (to a degree depending on the rigidity of the beams, their connections, and the nature of the bracing utilized) tends to resist the horizontal thrust in the manner of a vertical truss with the columns

* *Trans. Am. Soc. Civil Engrs.*, Vol. 105, 1940, p. 1720.

forming multiple chords, and the columns, beams and girders forming the web. The columns on the windward side of the axis of the bent become tension chords and those on the leeward side, compression chords.

In a successful design, the building must be assumed to act as a unit, and not distort appreciably when subjected to the applied lateral loads.

The floors of a building must act as horizontal diaphragms for the delivery of wind-load increments that arise in each story to the braced bents that are provided to receive them. Bracing planes usually run in more than one direction, and the floors must possess the necessary strength and rigidity under loads in their own planes to deliver these wind loads. If the floor is incapable of serving as a horizontal distribution unit, horizontal bracing should be provided between the braced bents. Most of the customary systems of floor construction used in fireproof buildings possess the requisite strength for this purpose.

As ordinarily constructed, the walls of a modern tall building cannot be relied upon to absorb any appreciable fraction of the applied wind force. Apart from the uncertainty as to whether the walls act integrally with the frame at the outset, it is obvious that if stressed heavily under horizontal loading they would crack and cease to be a dependable element of strength.* In setback buildings, the walls in the planes of the tower sides, of course, are discontinued below the roof of the widened portion of the building. Nor can wind resistance be counted upon for partitions, which, in general, are removable. For these reasons, whatever may be their role in lessening deflection and vibration, walls and partitions in buildings having a high ratio of height to width should be ignored in strength calculations, and provisions should be made in the structural frame for the entire recommended wind load.

It is recognized, of course, that buildings of low height-width ratio having heavy continuous walls derive much bracing advantage from the walls. Whether added bracing is necessary or not must be left to the analysis and judgment of the designer in each particular case.

49. Allocation of Wind Forces to Braced Bents.

Whereas in buildings of moderate height-width ratio it is generally possible to adapt sufficient bracing to almost any proposed frame, in tower-like buildings placement of adequate bracing should be given attention in the early architectural studies.

If the floors meet the requirements already given (or in the event that they do not, if they are adequately supplemented by bracing in horizontal planes), there need be no maximum limit of spacing of braced bents, nor any restriction imposed on carrying all the wind force to the end or side walls, if the bracing therein is sufficient to provide for the entire wind force.

In order to avoid obstruction of desired clear spaces, bracing often may be placed advantageously in outside walls, or between elevators, or around permanent shaft or service areas. Provision can be made in the floor construction for horizontal transfer of shears at offset levels.

Granted that the floors are capable of serving as effective distribution diaphragms for the applied wind loads, and that the columns at a given floor

* *Trans. Am. Soc. Civil Engrs.*, Vol. 105, 1940, p. 65.

level remain at fixed distances from one another, the various braced bents passing through the floor can be considered as taking loads in proportion to their rigidities and inversely as the deflections that would be produced in them under equal loads. For symmetrical towers under symmetrical loads the deflections of the braced bents at any floor will be equal and the loads will be distributed in proportion to the bent rigidities.

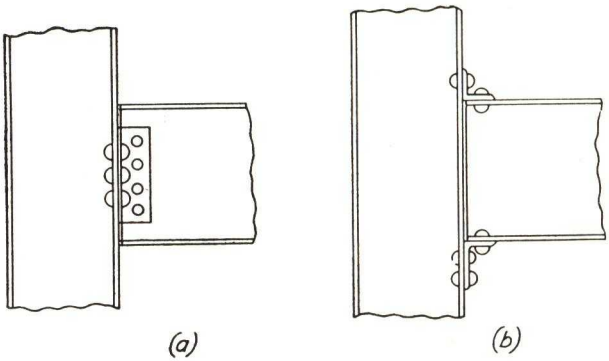

Fig. 66

50. Types of Wind Bracing. A wind bent consists of a line of columns and their connecting girders. The bracing in the plane of the bent is called the wind bracing. This may be of several types. The ordinary types of girder to column connection as shown in Figs. 66(*a*) or 66(*b*) serve mainly to transfer shear and have little resistance to bending. When architectural requirements of openings and passage ways do not permit the use of some form of diagonal wind bracing, these connections must be reinforced to care for the bending moments developed. The use of a split I-beam for the connection, as shown in Fig. 67, may be used when clip angles, as shown in Fig. 66(*b*), do not give sufficient rigidity. For buildings of moderate height and proportions this type of connection may be used throughout. But considerable deflection will result if the frame is high, or if the ratio of height to width is great.

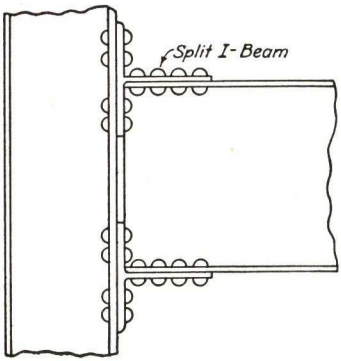

Fig. 67

Bracing consisting of full diagonals or K-frames are much more

economical and should be used where conditions will permit. Various arrangements of diagonal bracing are shown in Fig. 68.

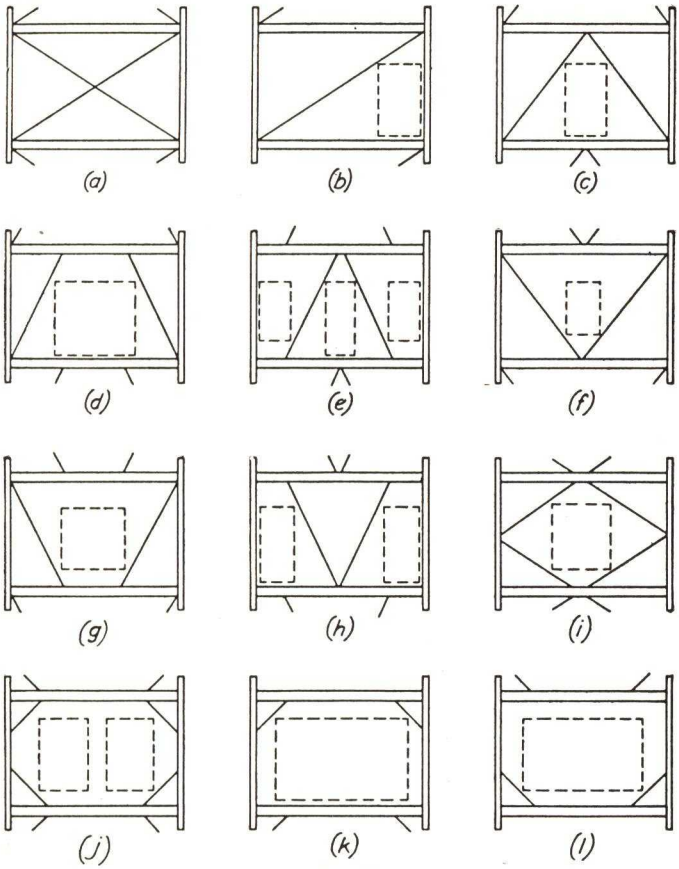

Fig. 68

51. Methods of Analysis. The lateral stability of any structure with quadrangular panels and without full diagonal bracing depends upon the rigidity of the girder to column connections; and the methods of analysis or design of such structures are based upon the assumption that there is no slip in these connections, and that the angle between the axes of the members at the joint does not change.

For an existing structure in which the sizes of the members are known the analysis of the stresses is exceedingly complicated. The moments, shears, and direct stresses carried by the various members depend upon their relative stiffnesses, and one of the methods given

in Chapter VI must be used. Quoting again from the *Final Report* of the Committee on Wind Bracing,

> For purposes of analysis the Cross method of moment distribution* has been found to be highly valuable, although for high frames the large number of cycles necessary to effect a sufficiently accurate solution renders it impracticable. Both the Goldberg† and the Grinter‡ methods make it possible to effect a rapid and sufficiently accurate analysis.
>
> As a means of conducting a rapid investigation of a bent, the method of *K*-percentages § is recommended as particularly valuable. This routine procedure is based upon a consideration of the relative stiffnesses of the members of the frame from which the vertical wind reactions at all columns may be obtained with reasonable accuracy.

Analysis by any of the methods based upon arbitrary assumptions as to the distribution of shears, direct stresses, or locations of points of contraflexure are valueless unless the frame is so proportioned that its elastic properties make the assumptions valid.

The usual procedure in the design of any structure is to calculate from the loads, the moments, shears, and direct stresses in the members, and then to proportion the members to care for the calculated stresses. This general procedure may be followed in the design of wind bracing *provided the fundamentals of elastic proportioning are not violated.* Thus the total horizontal wind shear may be definitely distributed among the columns, and then the structure proportioned for this distribution; or the relation of the column direct stresses may be assumed and the structure proportioned to maintain the assumed relationship. The accuracy of either of these methods of analysis depends upon the relative rigidities of girders and columns, and, if these members are properly proportioned, the resulting structure will distribute the stresses in accord with the original assumptions. The *procedure in design,* then, is divided into two parts, the calculation of the moments, shears, and direct stresses according to some consistent set of assumptions, and the proportioning of the frame to agree with the assumptions and to carry the stresses safely. The two methods of calculation in most common use are the *portal method* and the *cantilever method.*

52. Simple Portals. To develop the reasoning behind these statically determinate methods of analysis for many-storied, many-paneled

* Cross Method, *Transactions Am. Soc. Civil Engrs.* Vol. 96, 1932, p. 1.
See also *Bulletin* 66, Engineering Experiment Station, Ohio State University.

† Goldberg Method, *Trans. Am. Soc. Civil Engrs.,* Vol. 99, 1934, p. 962.

‡ Grinter Method, *Trans. Am. Soc. Civil Engrs.,* Vol. 99, 1934, p. 610.

§ *K*-Percentages, "Wind Stress Analysis by the *K*-Percentage Method," by F. P. Witmer, *Trans. Am. Soc. Civil Engrs.,* Vol. 107, 1942, p. 925.

frames, let us consider the simple two-column bent of Fig. 69(*a*). This bent, or portal, is subjected to a lateral force of 10 kips. If the columns are considered as rigidly fixed at the base, it is easy to visualize the distortion of the frame as shown in Fig. 69(*b*).

The location of the contraflexure points in the columns will depend upon the relative rigidities of the columns and girder. If the girder is very stiff compared to the column, the contraflexure points will approach the midheight of the columns, and, if the girder is very flexible, the contraflexure points will approach the tops of the columns. If

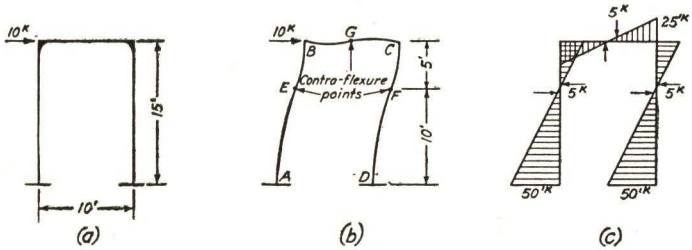

Fig. 69

the columns are alike, the contraflexure point in the girder will be at its midlength. For an approximate analysis, the location of the points of contraflexure in the columns may be estimated. In this problem we will assume them to be two-thirds the height from the bottom as shown.

Taking a section through the points of contraflexure in the columns and considering the upper part of the bent *EBCF* as a free body, the shear in each column is equal to 5.0 kips. ($\sum$ horiz. comp. = 0) and by moments about *E* the direct stress in the column is $\frac{10 \times 5}{10} = 5.0$ kips, compression in *CD* and tension in *AB*.

Considering the portion *EBG* as a free body, the shear in *BG* is 5 kips ($\sum$ vert. comp. = 0) and the direct compression in *BC* = 5.0 kips ($\sum$ horiz. comp. = 0). From these shears the bending moments may be calculated. Figure 69(*c*) indicates the directions of the shears and the bending moment diagrams. The diagrams are plotted with the convention of showing the moment on the side of the member where the flexural stress is tension.

Figure 70(*a*) shows a knee-braced type of portal. When knee braces can be used it is not customary to make the girder connections at *B* and *C* rigid, but to use an ordinary connection such as is shown in Fig. 66(*a*); therefore, the joints *B* and *C* will be considered as

hinged. This assumption is on the side of safety. The contraflexure points in the columns will fall near the midpoint between A and H. This location is sufficiently accurate for an approximate solution.

Taking a section through the points of contraflexure in the columns, and considering the upper part of the bent $EBCF$ as a free body, the

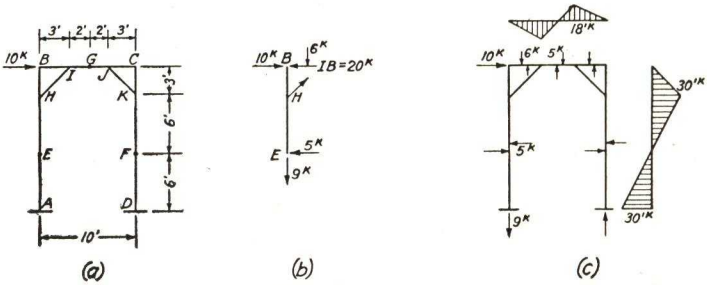

Fig. 70

shear in each column is equal to 5.0 kips ($\sum$ horiz. comp. = 0), and, by moments about E, the direct stress in the column is $\frac{10 \times 9}{10} = 9.0$ kips, compression in CD and tension in AB.

Considering the portion EBG as a free body, the shear in IG is 9.0 kips ($\sum$ vert. comp. = 0), and the direct compression in IG is 5.0 kips ($\sum$ horiz. comp. = 0).

Now considering a section cutting the knee brace as shown in Fig. 70(b) and with a center of moments at H,

$$IB \times 3 = 10 \times 3 + 5 \times 6 \quad \text{and} \quad IB = 20 \text{ kips}(c)$$

From $\sum$ horiz. comp. = 0, the horiz. comp. of $HI = 20 - 10 + 5 = 15$ kips, and $HI = 15.0 \times \sec. 45° = 21.2$ kips(t). From $\sum$ vert. comp. = 0, the shear in $IB = 15 - 9 = 6$ kips, and, from vertical resolutions at B, the direct stress in $BH = 6.0$ kips(c). The stresses in the right half of the bent will be the same as those in the left half with the signs reversed, with the exception of JC, which will have a direct stress of 10.0 kips(t). Figure 70(c) shows the moment diagrams for the members and the direction of the shears.

53. Continuous Frames, Portal Method. This method of analysis was first published in a series of articles in *Engineering News* in 1913, by Robins Fleming. These articles were later assembled and published by Mr. Fleming under the title of *Six Monographs on Wind*

*Stresses.** This method was described also by H. J. Burt in a small volume entitled *Steel Construction,* published in 1914.

In the portal method the bent is assumed to act as a series of portals consisting of two adjacent columns and the connecting girders,

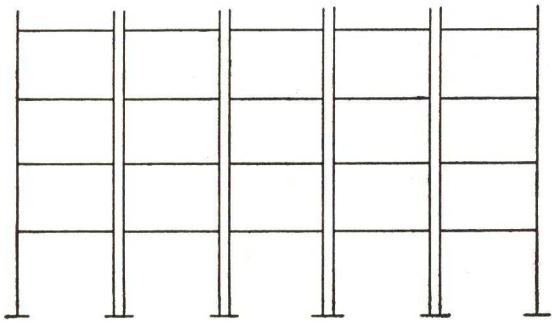

Fig. 71

as indicated in Fig. 71. Thus each interior column becomes a member common to two adjacent portals, and the shear in an interior column is, therefore, double that in an exterior column.

The assumptions made in the portal method are:

1. The connections between the girders and columns are perfectly rigid so that the angle between the tangents to the elastic lines at their intersection does not change.
2. The change in length of a member due to the direct stress in it is negligible.
3. The lengths of the members are taken as the distances between the intersections of their neutral axes.
4. The deflection of a member due to internal shearing stress is negligible.

These four assumptions are common to all the usual methods of analysis and design. In addition the portal method assumes:

5. The points of contraflexure of the columns are at their mid-heights.
6. The points of contraflexure of the girders are at their mid-lengths.
7. The shears in the interior columns are equal, and the shear in each exterior column is equal to half the shear on an interior column.

* See also "Wind Stresses in Buildings," by Robins Fleming, John Wiley & Sons, 1930, and "Wind Stresses in the Frames of Office Buildings," by Albert Smith, *J. Western Soc. Engrs.,* Vol. 20, April, 1915, p. 341.

If these seven assumptions are true, the shears, moments, and direct stresses in the members of the frame are statically determinate.

Owing to the tendency of the column anchorage to its base to fix the lower end of the column in the basement story, assumption 5 above

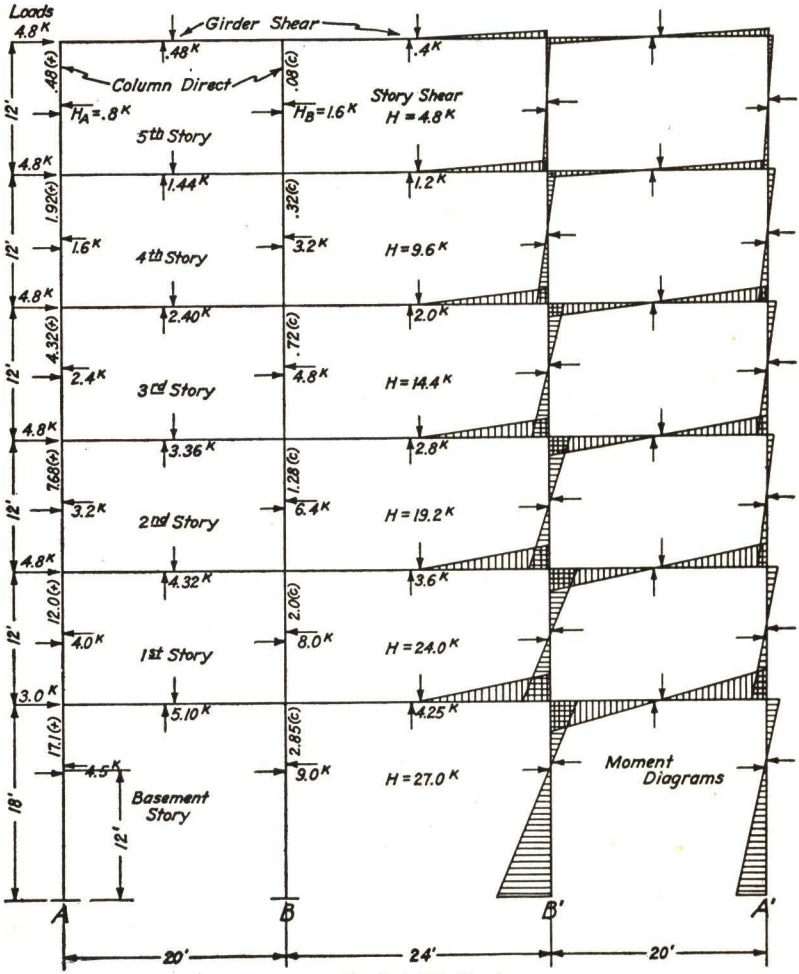

Portal Method
Fig. 72

is usually modified by locating the points of contraflexure in this story about two-thirds of the story height above the base.

To illustrate the application of the portal method, consider the six story bent shown in Fig. 72. The points of contraflexure are indicated

at the midlengths of the members in accordance with assumptions 5 and 6, modified in the basement story on account of the assumption that the bases of the columns are fixed.

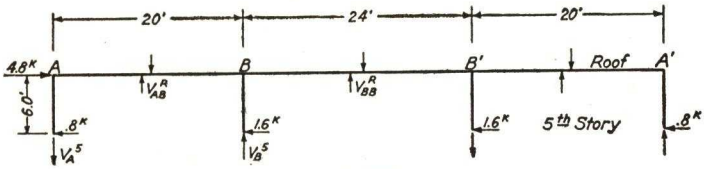

Fig. 73

The wind loads are assumed to be delivered to the bent as concentrated loads at the floor levels, by the walls and spandrel girders.

The total wind shear in any story is shown divided among the columns in accordance with assumption 7. In this case the total wind shear H in any story will be divided, 1/6 to columns A and A', and 1/3 to columns B and B'.

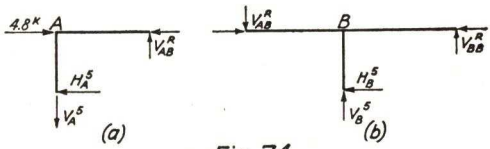

Fig. 74

To compute the shears in the girders and the direct stresses in the columns it is necessary to start at the roof and proceed downward. Figure 73 shows the roof and fifth story columns as a free body in equilibrium. The column shears are known. Figure 73 may be divided into three parts by cutting the girders at their contraflexure points, as shown in Figs. 74(a) and 74(b). In Fig. 74(a), by moments at A,

$$V_{AB}^R \times 10 = H_A^5 \times 6 \quad \text{and} \quad V_{AB}^R = 0.48 \text{ kip*}$$

Similarly, in Fig. 74(b), by moments at B,

$$V_{BB}^R \times 12 + V_{AB}^R \times 10 = H_B^5 \times 6 \quad \text{and} \quad V_{BB}^R = 0.40 \text{ kip}$$

In Fig. 74(a), by vertical resolutions,

$$V_A^5 = V_{AB}^R = 0.48 \text{ kip}(t)$$

In Fig. 74(b), by vertical resolutions,

$$V_B^5 = V_{AB}^R - V_{BB}^R = 0.08 \text{ kip}(c)$$

Each story and floor may be divided by sections in a similar manner, and the shears and direct stresses determined. These are all shown on Fig. 72.

* The superscripts refer to the story or floor of the member.

If the panels had been equal, the girder shears in any floor would have been equal and the interior column direct stresses all zero. If the middle panel had been narrower than the outside panels, the direct stress in column B would have been tension instead of compression.

The bending moments in the columns and girders may be obtained by multiplying the shear in the member by the distance from the contraflexure point to the joint. Thus, the maximum moment in roof girder AB is $0.48 \times 10 = 4.8$ ft-kips, and the maximum moment in the second-story column B is $6.4 \times 6 = 38.4$ ft-kips. These moments are shown graphically on Fig. 72.

The girder direct stresses are always small and seldom need be taken into account. They may easily be calculated by horizontal resolutions; thus, in Fig. 74, the direct stress in girder AB is $4.8 - 0.8 = 4.0$ kips (c).

54. The Cantilever Method. The cantilever method of analysis was first published by A. C. Wilson in 1908* and was also described by Mr. Fleming in his *Six Monographs on Wind Stresses,* referred to in Art. 53. This method assumes that the wind bent acts as a vertical cantilever, anchored at the base, and that the shears and direct stresses are distributed in a manner similar to those in a solid webbed beam.

Referring to the assumptions made in the portal method given in Art. 53, the first six assumptions in the cantilever method are the same, but instead of the seventh assumption of the portal method, the following is substituted.

7. The direct stresses in the columns are directly proportional to their distances from the neutral axis of the bent.

By this assumption the columns of the bent become chords, and thus their direct stresses are frequently called chord stresses. The cantilever action implies that any horizontal plane section remains a plane after bending. In very tall buildings this is advantageous because the irregular lengthening and shortening of the several columns, due to direct stresses in them when proportioned by the portal method, may cause large secondary bending stresses in the girders.†

In determining the total direct stresses in the columns from assumption 7 above, the relative column areas should be taken into account because the maintenance of planarity depends upon the uniform variation of *unit stresses.*

* "Wind Bracing with Knee Braces or Gusset Plates," by A. C. Wilson, *Eng. Record,* Sept. 5, 1908.

† "Tests and Design of Steel Wind Bents," by Large, Carpenter, and Morris, *Bulletin* 93, Engineering Experiment Station, Ohio State University.

Figure 75 shows the same bent as Fig. 72, previously solved by the portal method. In this case we will assume that trial computations have shown that the areas of columns A and B will be approximately

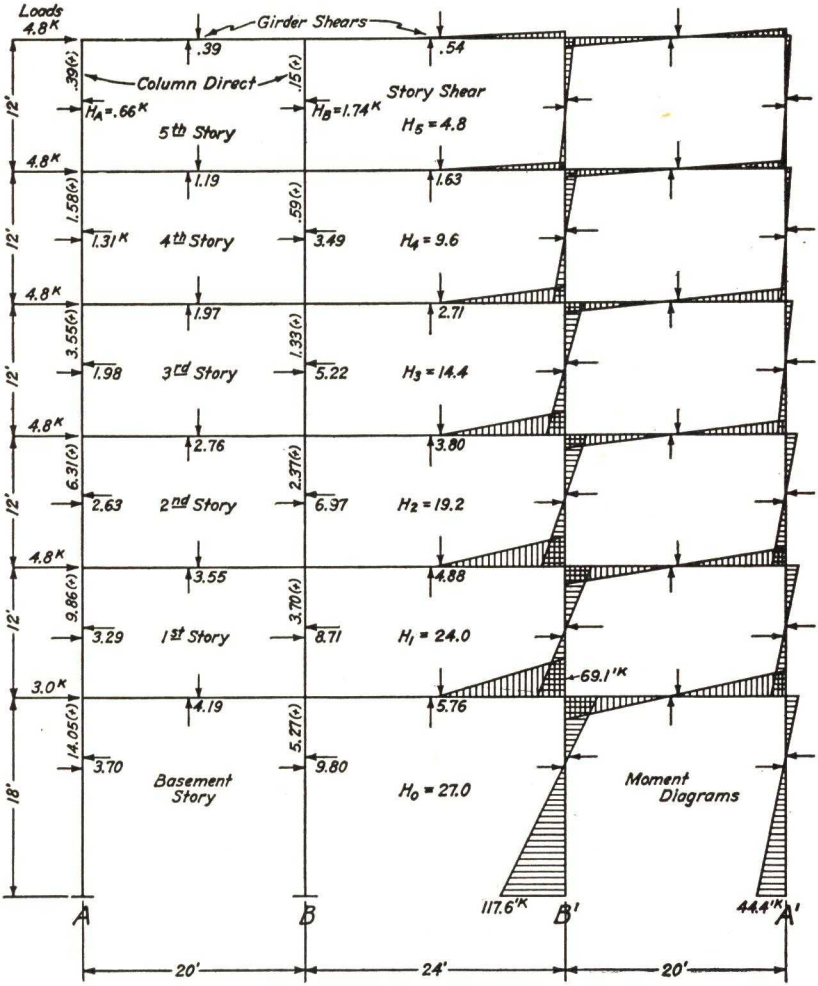

Cantilever Method
Fig. 75

equal. Calling the direct stress intensity in column A equal to unity, the relative stress intensity in column B will be $^{12}/_{32}$ of that in column A.

Figure 76 shows the bent above the contraflexure level in the third

story, as a free body, and the relative column direct stresses. If O.T.M. designates the wind overturning moment about a column contraflexure level,

$$\text{O.T.M.} = 2 \times 32V_A + 2 \times 12V_B$$

From assumption 7,

$$V_B = \tfrac{3}{8}V_A \quad \text{and} \quad V_A = \frac{\text{O.T.M.}}{73}$$

From these equations the column direct stresses may be obtained in any story. The 73 ft in the denominator of the last equation is

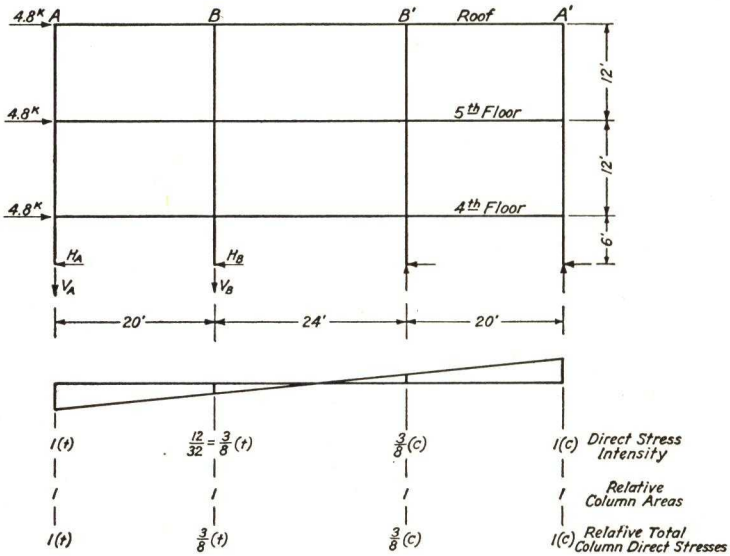

Fig. 76

sometimes spoken of as the *equivalent base* of the bent. The total column direct stresses are recorded on Fig. 75.

Segregating the joints as in Fig. 74, the girder shears may be calculated by vertical resolutions. Referring to Fig. 74(*a*),

$$V_{AB}^R = V_A^5 = 0.39 \text{ kip}$$

and, referring to Fig. 74(*b*),

$$V_{BB}^R = V_{AB}^R + V_B^5 = 0.39 + 0.15 = 0.54 \text{ kip}$$

For the second floor girders, referring to Fig. 75,

$$V_{AB}^2 = V_A^1 - V_A^2 = 9.86 - 6.31 = 3.55 \text{ kips}$$

and

$$V_{BB}^2 = V_{AB}^2 + V_B^1 - V_B^2 = 3.55 + 3.70 - 2.37 = 4.88 \text{ kips}$$

The column shears are obtained by taking moments about the joints, successively. Referring to Fig. 74(a),

$$H_A^5 \times 6 = V_{AB}^R \times 10 \quad \text{and} \quad H_A^5 = 0.66 \text{ kip}$$

and, referring to Fig. 74(b),

$$H_B^5 \times 6 = V_{AB}^R \times 10 + V_{BB}^R \times 12 \quad \text{and} \quad H_B^5 = 1.74 \text{ kips}$$

The other column shears may be obtained similarly. All the shears and direct stresses are shown on Fig. 75. The bending moments in the girders and columns are obtained by multiplying the shear in the member by the distance from the contraflexure point to the joint. These moments are shown graphically on Fig. 75.

It is interesting to note the wide difference in the stresses when calculated by the portal method and by the cantilever method.

55. Unsymmetrical Bents. The calculation of wind stresses for an unsymmetrical bent follows the same principles used in the calculations for symmetrical bents. Figure 77 shows the upper two and one-half stories of an unsymmetrical bent. The column spacings and the relative column areas are given on the figure. The calculations will be made according to the cantilever method.

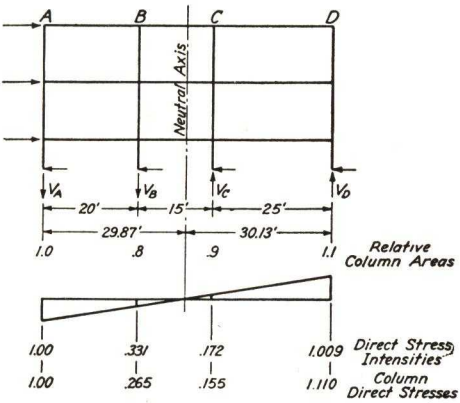

Fig. 77

The neutral axis of the bent is located 30.13 ft from column D, and the direct stress intensities are proportional to the distances from the neutral axis. When these are multiplied by the relative column areas, the relative column direct stresses are obtained. By moments,

$$\text{O.T.M.} = V_A \times 29.87 + V_B \times 9.87 + V_C \times 5.13 + V_D \times 30.13$$

Substituting the relative column direct stresses for V_B, V_C, and V_D, we get

$$V_A = \frac{\text{O.T.M.}}{66.72}$$

From this the column direct stresses, girder shears, column shears, and bending moments may be calculated.

56. Knee-Braced Bent. Bents with knee braces may be calculated either by the portal or the cantilever method. Figure 78 shows such a

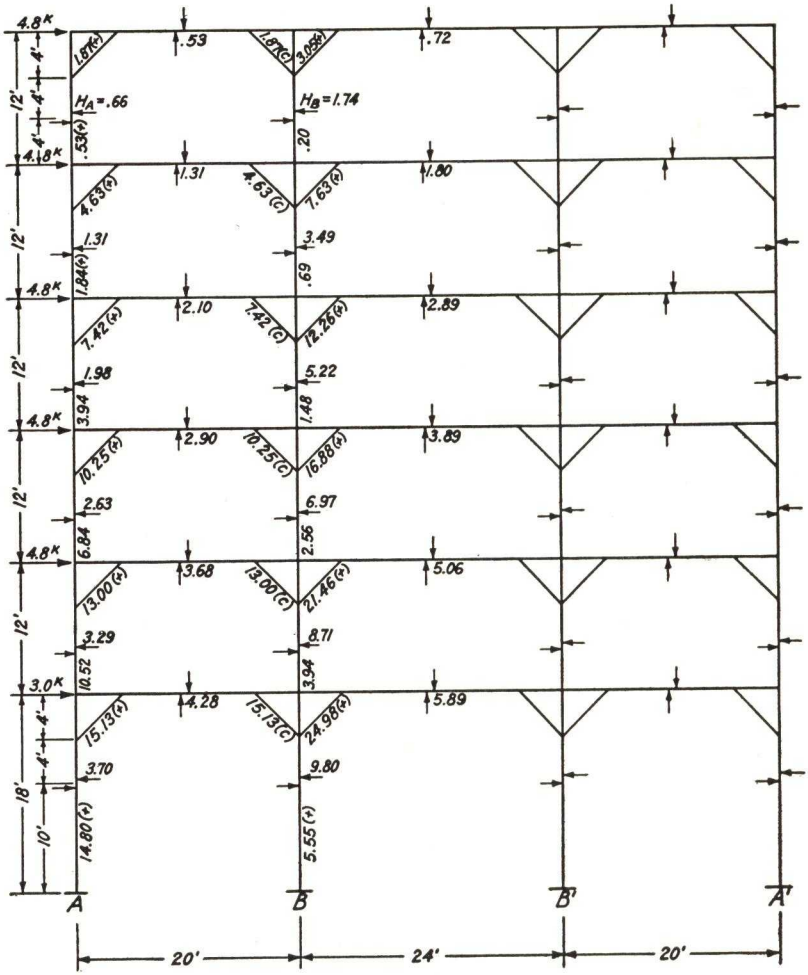

Fig. 78

bent which has the same outside dimensions and loads as the bents shown in Figs. 72 and 75.

When knee braces are used it is customary to use an ordinary girder to column connection such as is shown in Fig. 66(*a*), and to disregard the small resistance to bending which may be developed at the joint.

The points of contraflexure in the columns will fall about midway between the foot of the knee brace and the floor below. With these assumptions, the stresses may be calculated by application of the laws of statics. The shears and direct stresses shown on Fig. 78 have been calculated by the cantilever method. In this problem the knee braces are placed at 45°. The dimensions given are to the center lines of columns and girders.

Figure 79 shows the roof girders and fifth-story columns, cut at the contraflexure points. Considering the left half of girder AB, and with a center of moments at A, the vertical component of the knee brace stress, V_K, may be obtained.

$$V_K \times 4 = 0.53 \times 10 \quad \text{and} \quad V_K = 1.32 \text{ kips}$$

Or considering column A and with the same center of moments, the horizontal component of the knee brace stress, H_K, may be found.

$$H_K \times 4 = 0.66 \times 8 \quad \text{and} \quad H_K = 1.32 \text{ kips}$$

The stress in the knee brace is $1.32 \times 1.414 = 1.87$ kips (t). By similar equations the stresses in all the knee braces may be obtained.

Figure 80 shows a typical moment diagram for the girders, and Fig. 81 shows the moment diagram for column A.

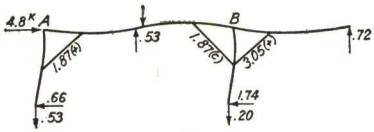

Fig. 79

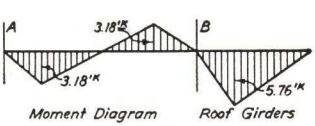

Fig. 80

57. Deflections and Vibrations. As stated in Art. 49, the floors act as horizontal diaphragms which cause the building to deflect as a whole, and the loads carried by the various braced bents are inversely proportional to their deflections under equal loads. It is, therefore, very necessary that the question of bent deflections should be carefully studied.

The sizes of the columns and girders must be sufficient to support the dead and live loads safely. This is the primary purpose of the building frame. After the column spacings have been determined to suit architectural requirements, the next step is to determine the dead and live load stresses in the frame, and to proportion the members for these stresses. This will give a preliminary minimum design which may or may not have to be altered to care for the wind stresses and to give the frame the required lateral rigidity.

Quoting from the *Final Report* of the Committee on Wind Bracing.*

Quite apart from the obvious necessity for providing adequate strength in structural members and details and for proper distribution of wind forces among the bents, care must be taken to insure that deflections and vibrations are kept within such limits as render tall buildings comfortably habitable.

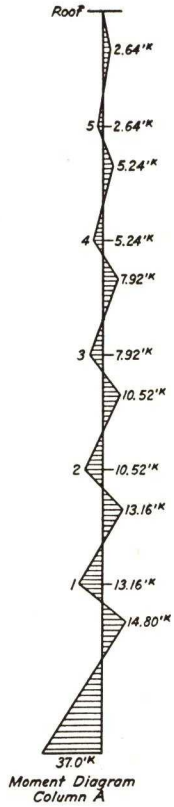

Fig. 81

Only experience will reveal the relation between computed maximum deflection and comfortable occupancy. By reason of the present impossibility of appraising in advance the restraining or damping effect of the non-skeleton parts of a building upon deflection, it is convenient to use, as a measure of the stiffness, the relation between the maximum deflection of the top of the frame and its height, assuming the frame to carry the entire lateral force. This might perhaps be called the "deflection index." Because of the restraining effect of walls, partitions and floors, it does not represent the actual deflection, but some multiple of that quantity. Nevertheless, it is a convenient standard by which to judge the probable stiffness of a building.

Mr. H. V. Spurr, in his book, *Wind Bracing, the Importance of Rigidity in High Towers,*† gives a very interesting and logical treatment of the theoretical deflections of tower buildings with various types of wind bracing, and the design of wind bents to secure definite rigidities. In this book he states that experience has shown that buildings designed to give a total theoretical deflection of the top of the frame, under a triangular wind load increasing from zero at the ground to 30 lb per sq ft at a height of 1000 ft, equal to 0.002 of the height, give a satisfactory behavior in the matter of deflection and vibration.

Quoting further from the *Final Report* of the Committee on Wind Bracing,

> It is possible that higher theoretical frame deflections would be tolerable, but relaxation in this regard should come only as a result of accumulated experience.
>
> Instances are known of well-designed buildings of 20 to 25 stories in height, having deflection indexes upward of $0.004h$ or $0.005h$ that have behaved satisfactorily. In addition to securing comfortable occupancy, a proper limitation of deflection guards against injury to internal and external masonry.‡

* *Trans. Am. Soc. Civil Engrs.*, Vol. 105, 1940, p. 1713.

† McGraw-Hill Book Co., 1930.

‡ *Proc. Am. Soc. Civil Engrs.*, June, 1939, p. 1024.

If the deflection index of $0.002h$, under the triangular loading recommended by Mr. Spurr, is accepted, the theoretical deflection under the wind load recommended by the Committee on Wind Bracing (see Art. 6) would be approximately $0.003h$.

58. Elastic Requirements. The assumptions of either the portal or the cantilever method, as given in Arts. 53 and 54, can be realized only for those portions of fairly regular bents which are not in close proximity to the fixed column bases in the lower story or to set-backs or places where girders are omitted for wide openings, or other irregularities.*

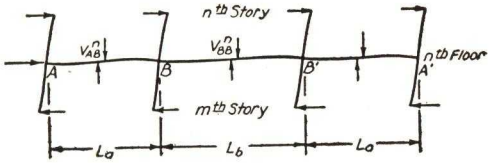

Fig. 82

For the regular portions of a bent the elastic requirements may be derived as follows.† If the point of contraflexure is at the mid-length of a girder, the slopes of the elastic line at its ends must be equal; therefore,

$$\theta_A = \theta_B = \theta_{B'} = \theta_{A'}$$

From equation [41] of Art. 42,

$$M_{AB} = 2EK_a(2\theta_A + \theta_B - 3R) \qquad [1]$$

For the girders, disregarding the lengthening and shortening of the columns due to direct stresses in them, the deflection is zero and, therefore, $R = 0$. Then, referring to Fig. 82,

$$M_{AB}^n = 2EK_a^n(3\theta) = V_{AB}^n \frac{L_a}{2}$$

$$K_a^n = \frac{V_{AB}^n L_a}{12E\theta} \qquad [2]$$

The total moment in any story of a bent (sum of the moments at both ends of all the columns of a story) is constant and equals the total shear in the story times the story height. Since the total moment in each story is constant, the sum of the moments at the ends of all the girders at a floor is constant, because the girders must resist the column moments.

* "Tests and design of Steel Wind Bents," by Large, Carpenter, and Morris, *Bulletin* 93, Engineering Experiment Station, Ohio State University.

† "Design of Tall Building Frames to Resist Wind," by Clyde T. Morris and A. Ward Ross, Jr., *Bulletin* 48, 1929, Engineering Experiment Station, Ohio State University.

$$M^n_{AB} = 6EK^n_a\theta \quad \text{and} \quad M^n_{BB} = 6EK^n_b\theta \qquad [3]$$

$$M^m_A = 2EK^m_A(3\theta - 3R_m) \quad \text{and} \quad M^m_B = 2EK^m_B(3\theta - 3R_m) \qquad [4]$$

$$M^n_A = 2EK^n_A(3\theta - 3R_n) \quad \text{and} \quad M^n_B = 2EK^n_B(3\theta - 3R_n) \qquad [5]$$

Also, from Fig. 82,

$$M^n_{AB} = M^m_A + M^n_A \quad \text{and} \quad M^n_{BA} + M^n_{BB} = M^m_B + M^n_B \qquad [6]$$

Substituting the values of the moments in the last two equations, [6],

$$6EK^n_a\theta = 6EK^m_A(\theta - R_m) + 6EK^n_A(\theta - R_n) \qquad [7]$$

$$6EK^n_a\theta + 6EK^n_b\theta = 6EK^m_B(\theta - R_m) + 6EK^n_B(\theta - R_n) \qquad [8]$$

Assuming $R_m = R_n$ and dividing [7] by [8], we get

$$\frac{K^n_a}{K^m_A + K^n_A} = \frac{K^n_a + K^n_b}{K^m_B + K^n_B} \qquad [9]$$

For the columns of any story, the sum of the moments at the ends of a column is equal to the column shear times the story height. Assuming the contraflexure points at the midheight,

$$2M^n_A = H^n_A h \quad \text{and} \quad 2M^n_B = H^n_B h \qquad [10]$$

Substituting the values of the moments from equation [5],

$$4EK^n_A(3\theta - 3R_n) = H^n_A h$$

$$K^n_A = \frac{H^n_A h}{4E(3\theta - 3R_n)} \qquad [11]$$

The denominator of equation [11] is constant in any story.

Equations [2], [9], and [11], expressed in words, are

1. The K's of the girders must be proportional to the girder shear times its length.

2. The sum of the K's of a column above and below a floor must be proportional to the sum of the K's of the girders directly connected to it.

3. The K's of the columns must be proportional to the column shears times the story height.

59. Portal Design. The use of the portal method of design should be restricted to buildings of moderate height or height-to-width ratio, because, in high towers, when designed by this method, the large difference between the direct deformation of the outside columns and of

those adjacent causes large secondary stresses in the girders, especially those in the upper stories.*

Let us consider the sixth story of a regular twenty-story bent similar to the six-story bent shown in Fig. 72. The dead load of the floors will be taken as 120 lb per sq ft and the average live load as 35 lb per sq ft. The exterior walls will be assumed to weigh 80 lb per sq ft of wall surface. These are assumed to be walls with windows. This is an interior bent and the bays are 20 ft.

The approximate loads on the columns of the sixth story are

	Column A	*Column B*
Wall =	$14\frac{1}{2}\times12\times20\times80=278.4$ kips	0
Floors =	$15\times20\times10\times155=465.0$ "	$15\times20\times22\times155=1023.0$ kips
Column weight =	$14\times12\times80=$ 13.4 "	$14\times12\times240$(FP) = 40.3 "
	756.8 "	1063.3 "

Using allowed unit stresses as given in the *Specifications for the Design and Erection of Structural Steel for Buildings*, 1941, of the American Institute of Steel Construction, the required areas for the columns will be

$$\text{Column } A = \frac{756.8}{16.37} = 46.2 \text{ sq in.} \qquad \text{Try } 14'' \text{ WF } 158 \text{ lb.}$$

$$\text{Area} = 46.47 \text{ sq in.}$$

$$\text{Column } B = \frac{1063.3}{16.40} = 64.8 \text{ sq in.} \qquad \text{Try } 14'' \text{ WF } 219 \text{ lb.}$$

$$\text{Area} = 64.36 \text{ sq in.}$$

These sizes are required for gravity loads alone.

The specifications permit an increase of one-third in the unit stresses due to a combination of wind and other loads. It is possible, therefore, that the sections required by the gravity loads may not have to be increased to care for the wind loads.

From the assumptions of the portal method the shear in an interior column is double that in an exterior column; therefore, from equation [11] of Art. 58, the moment of inertia of an interior column should be double that of an exterior column. In the sixth story, if the sizes given above for gravity loads are used, the moments of inertia are

For column A, $14''$ WF 158 lb $\quad I = 1900.6$ in.^{4}

For column B, $14''$ WF 219 lb $\quad I = 2798.2$ in.^{4}

* See *Bulletin* 93, Engineering Experiment Station, Ohio State University.

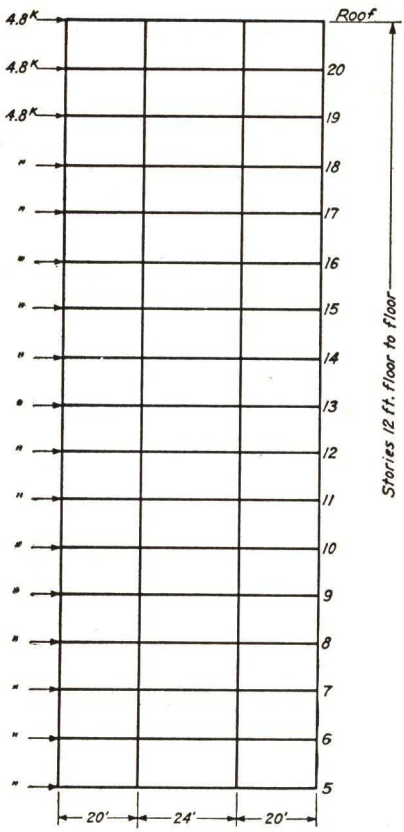

Fig. 83

Apparently the size of column *B* should be increased in order to keep the shear distribution in the proper ratio. However, tests have shown that the relative column stiffnesses do not materially affect the shear distribution* if the girders are designed to give the required stiffnesses from panel to panel. The only effect of the column irregularity will be to shift the point of contraflexure in the girder slightly.

Figure 83 shows a diagram of the bent, and from this the shears, moments, and direct stresses due to wind may be calculated, as was done in Art. 53, Fig. 72. These are shown for the fifth and sixth-story columns and the sixth-floor girders, in Fig. 84.

Continuing our computations for the design of the columns:

Sixth-Story Column A

$$\text{Direct stress} = 108.0 \text{ kips}$$

$$\text{Wind bending} = 12.0 \times 6.0 = 72.0 \text{ ft-kips}$$

For the 14″ WF 158 lb, the maximum fiber stress due to wind is

$$\text{Direct} = \frac{108{,}000}{46.47} = 2320 \text{ psi}$$

$$\text{Bending} = \frac{72{,}000 \times 12}{253.4} = 3410 \text{ "}$$

$$\text{Total} = 5730 \text{ "}$$

This is slightly greater than one-third the allowed unit stress for dead and live loads (16,370 psi), therefore, the section must be increased for strength.

* *Bulletin* 93, Engineering Experiment Station, Ohio State University.

Try 14″ WF 167 lb $A = 49.09$ in.^{2} $I = 2020.8$ in.^{4} $S = 267.3$ in.^{3}

$$\text{Dead + live load unit stress} = \frac{756{,}800}{49.09} = 15{,}420 \text{ psi}$$

$$\text{Wind direct} \quad \text{“} \quad \text{“} \quad = \frac{108{,}000}{49.09} = 2{,}200 \quad \text{“}$$

$$\text{Wind bending} = \frac{72{,}000 \times 12}{267.3} = 3{,}230 \quad \text{“}$$

$$\text{Total} = 20{,}850 \quad \text{“}$$

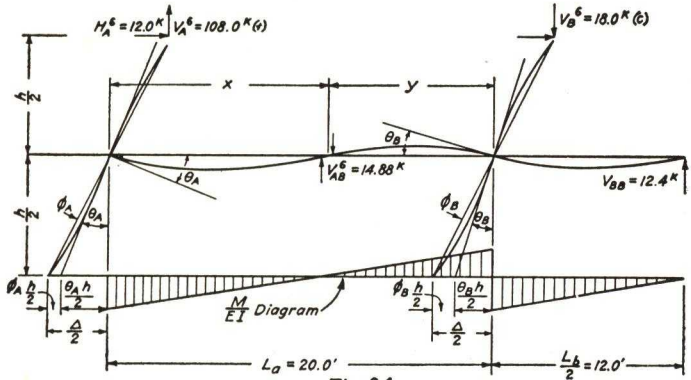

Fig. 84

The maximum allowed unit stress = 1.33 × 16,370 = 21,827 psi. This section will do.

Sixth-Story Column B

$$\text{Direct} = 18.0 \text{ kips}$$

$$\text{Bending} = 24.0 \times 6.0 = 144.0 \text{ ft-kips}$$

For the 14″ WF 219 lb, $I = 2798.2$, the maximum fiber stress due to wind is

$$\text{Direct} = \frac{18{,}000}{64.36} = 280 \text{ psi}$$

$$\text{Bending} = \frac{144{,}000 \times 12}{352.6} = 4900 \quad \text{“}$$

$$\text{Total} = 5180 \quad \text{“}$$

This is less than one-third of the allowed unit stress for dead and live loads (16,400 psi); therefore the section will do.

Girder Design. Because of the restraining effect of the columns, it is difficult to evaluate the girder moments due to vertical loads. Be-

cause of the rigidity of the girder to column connections required to care for the wind bending moments, it is logical to consider the girders as continuous through the columns. In very tall buildings the columns are so much stiffer than the girders that it is not excessive to assume the moment at the face of the column as $wL^2/12$, as for a beam with fully fixed ends. The maximum moment at the midspan may be greater than $wL^2/24$, owing to the ends not being fully fixed and to the possibility of the absence of live load in adjacent panels. $wL^2/16$ is a safe value to use. In each case the clear span between the faces of columns may be used in figuring the moments.

If the floor slabs are assumed to be reinforced in two directions (see Art. 12), the simple beam bending moment in the girder will be

$$\text{S.B.M.} = 1.2 \times \frac{WL}{8}$$

in which

$$W_{AB} = 200w \text{ for the 20-ft panel}$$

and

$$W_{BB} = 282w \text{ for the 24-ft panel} \quad \text{(See Art. 13.)}$$

For calculating the bending moment in the girders, the live load will be taken as 50 lb per sq ft.

$$W_{AB} = 200 \times 170 = 34{,}000 \text{ lb}$$

$$W_{BB} = 282 \times 170 = 47{,}940 \text{ "}$$

$$\text{S.B.M. } M_{AB} = 1.2\frac{34.00 \times 18.75}{8} = 95.62 \text{ ft-kips}$$

$$\text{S.B.M. } M_{BB} = 1.2\frac{47.94 \times 22.75}{8} = 163.60 \text{ ft-kips}$$

The moment diagrams for vertical loads may be taken as two parabolas, as shown in Fig. 85. The middle ordinate of each parabola will be the simple beam bending moment. Owing to the reinforcing effect of the girder connection, the critical moment for the girder will occur at a small distance from the face of the column. This has been arbitrarily taken as 6 in. From the properties of the parabola, the reduction in negative moment at a distance a from the face of the column will be

$$M' = \frac{4a(L-a)}{L^2}M \qquad [12]$$

in which M' = reduction in negative moment,
a = distance from the face of the column,
M = simple beam bending moment.

In Fig. 85, lines (1), (2), and (3) give the dead and live load moments. Lines (4) and (5) give the moments due to wind, and line

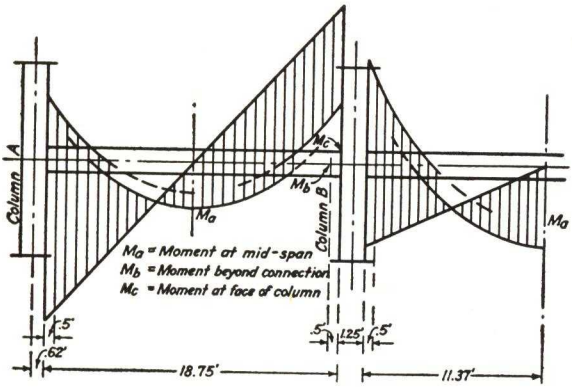

(1) Dead $\left\{\begin{array}{l} M_a = \frac{1}{2} \times 95.62 = 47.8 \text{ ft-kips} \\ M_b = 63.8 - 9.8 = 54.0 \text{ ft-kips} \\ M_c = \frac{2}{3} \times 95.62 = 63.8 \text{ ft-kips} \end{array}\right.$ $M_a = \frac{1}{2} \times 163.6 = 81.8$ ft-kips

(2) +Live $M_b = 109.1 - 14.1 = 95.0$ ft-kips

(3) load $M_c = \frac{2}{3} \times 163.6 = 109.1$ ft-kips

(4) Wind $M_b = 14.88 \times 8.87 = 132.0$ ft-kips $M_b = 12.4 \times 10.87 = 134.8$ ft-kips

(5) $M_c = 14.88 \times 9.37 = 139.4$ ft-kips $M_c = 12.4 \times 11.37 = 141.0$ ft-kips

(6) Total max., $M_b = 186.0$ Req. $S = 83.7$ in.^{3} $M_b = 229.8$ Req. $S = 103.4$ in.^{3}

(7) Req. for strength, 16″ WF 58# $I = 746.4$ in.^{4} 16″ WF 64# $I = 833.8$ in.^{4}

(8) From equation [2], $I_{AB}/I_{BB} = \dfrac{V_{AB}L_a^2}{V_{BB}L_b^2} = 0.83$

(9) Elastic req., $I_{AB} = 0.83 \times 833.8 = 692.0$ in.^{4}

(10) Use 16″ WF 58# $I = 746.4$ in.^{4} 16″ WF 64# $I = 833.8$ in.^{4}

Fig. 85

(6) gives the maximum combined moment. Line (7) shows the size of the girder required to care for this maximum moment, using a design stress of 1⅓ × 20,000 psi.

To comply with the elastic requirements as given in equation [2],

$$\frac{K_{AB}}{K_{BB}} = \frac{V_{AB}L_a}{V_{BB}L_b} \qquad K = \frac{I}{L}$$

Then

$$\frac{I_{AB}}{I_{BB}} = \frac{V_{AB}L_a^2}{V_{BB}L_b^2} = 0.83$$

The girder chosen for AB should be decreased in size slightly to comply

with the elastic requirements, but the sizes given are as near to the elastic requirements as standard commercial sections will give. These sizes are given in line (10).

60. Bent Deflection. As noted in Art. 52, the deflection of the bent under wind loads should not be excessive. The total drift of a frame is made up of: (*a*) flexure of the girders, (*b*) flexure of the columns, (*c*) deformations of the connections and bracing, (*d*) chord drift due to lengthening and shortening of the columns. The first three are termed *web drift* and constitute the greater portion of the total drift.

If equation [11] is not satisfied, the shift in contraflexure point in the girder may be determined by calculating the changes in the angle θ due to the irregularity in the column flexures. From Fig. 84, the total web drift of the panel is Δ, and this must be the same for all columns of the bent. The drift due to column flexure will be:

$$\text{For column } A = \phi_A h$$
$$\text{For column } B = \phi_B h$$

From area moments, for column A,

$$\frac{\phi_A h}{2} = \frac{H_A h}{2EI_A} \times \frac{h}{4} \times \frac{2h}{6} = \frac{H_A h^3}{24EI_A} \qquad [13]$$

$$\phi_A = \frac{H_A h^2}{12EI_A} \qquad [14]$$

Similarly, for column B,

$$\phi_B = \frac{H_B h^2}{12EI_B} \qquad [15]$$

If I_B were double I_A, as would be required by equation [11], θ_A would equal θ_B, and from area moments for the girder its value would be

$$\theta = \frac{V_{AB} L_a^2}{12EI_a} \qquad [16]$$

$$\Delta = \phi_A h + \theta_A h = \phi_B h + \theta_B h \quad \text{and} \quad \theta_A - \theta_B = \phi_B - \phi_A \qquad [17]$$

$$\theta = \frac{\theta_A + \theta_B}{2} \quad \text{and} \quad \theta_A = \theta + \frac{\phi_B - \phi_A}{2} \qquad [18]$$

$$\theta_B = \theta - \frac{\phi_B - \phi_A}{2} \qquad [19]$$

From slope deflection, equation [1], for girder AB,

$$M_{AB} = V_{AB} x = 2EK_a(2\theta_A + \theta_B) \qquad [20]$$

From these equations for the sixth story, $\theta_6 = \dfrac{95.75}{E}$ and

$$\phi_A^6 = \frac{10.25}{E} \qquad \phi_B^6 = \frac{14.81}{E}$$

$$\theta_A^6 = \frac{98.03}{E} \qquad \theta_B^6 = \frac{93.47}{E}$$

$$x = 121.0 \text{ in.} \qquad y = 119.0 \text{ in.}$$

From these the web drift per panel is

$$\Delta = (\theta_A^6 + \phi_A^6)h = 0.537 \text{ in.}$$

$$\frac{\Delta}{h} = \frac{0.537}{144} = 0.0037$$

If the design is consistent throughout the height of the building, the web drift per story will be nearly constant.*

It is expected that the design of the girder connections will be such that their elastic contribution to web drift will be the same in all panels. It may be that this contribution will be of a negative value due to the local reinforcement of the girders by the connections at their ends.†

In calculating the web drift, the elastic lines of the columns and girders have been assumed to be continuous to their intersections. This is probably sufficient to allow for the contribution of the deformation of the connections.

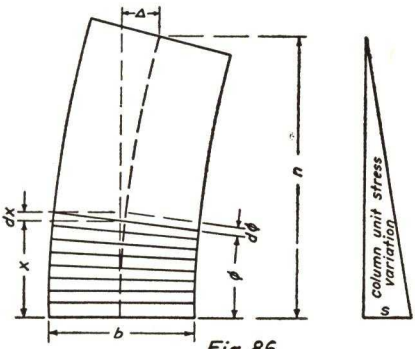

Fig. 86

There yet remains the drift due to the lengthening and shortening of the columns, called *chord drift.* The column areas are directly proportional to the height of the building above the section under consideration. The direct wind stresses in the columns are proportional to the square of the same height (for a wind load uniform per foot vertical). Therefore, the unit stresses in the columns due to direct wind stress increases directly with the distance down from the roof.

* See *Bulletin* 93, Engineering Experiment Station, Ohio State University.

† "Elastic Properties of Riveted Connections," by J. Charles Rathbun, *Trans. Am. Soc. Civil Engrs.*, Vol. 101, 1936, p. 524.

In Fig. 86 let b = the width of the bent,

n = the height of the bent,

s = the unit stress in the outer columns at the base due to direct wind stress,

ϕ = the angle of the floor with the horizontal at any height x,

Δ = lateral drift of the top of the bent.

$$d\phi = \frac{2s(n - x)dx}{Ebn}$$

$$\Delta = \int_0^n (n - x)d\phi = \frac{2s}{Ebn}\int_0^n (n - x)^2 dx = \frac{2sn^2}{3Eb} \qquad [21]$$

Let us now calculate the chord drift of the bent above the sixth floor.

$$n = 15 \times 12 = 180 \text{ ft}$$

$$s = 2200 \text{ psi} \quad \text{(See Art. 59)}$$

$$b = 64 \text{ ft}$$

$$\Delta = \frac{2 \times 2200 \times (12 \times 180)^2}{3E \times 12 \times 64} = 0.306 \text{ in.}$$

$$\frac{\Delta}{n} = \frac{0.306}{12 \times 180} = 0.00014$$

The total drift will be

$$\begin{aligned} \text{Web drift} &= 0.0037h \\ \text{Chord drift} &= \underline{0.0001h} \\ \text{Total} &= 0.0038h \end{aligned}$$

According to Mr. Spurr this drift is too high. It may be reduced by stiffening the girders proportionately. If this is done, care must be used to keep the ratio of the moments of inertia of the girders the same as given in line (8) of Fig. 85.

61. Cantilever Design. Spurr Method. Mr. H. V. Spurr, chief engineer of Purdy and Henderson Company, New York, was the first to publish a rational method of design of wind bracing for tall buildings.* This method was recommended and described in the *Third Progress Report* of the Committee on Wind Bracing† of the American Society of Civil Engineers.

* *Wind Bracing, the Importance of Rigidity in High Towers,* by H. V. Spurr, 1930.

† *Proc. Am. Soc. Civil Engrs.*, December, 1933, pp. 1611 and 1621.

In the portal method of design, or in any method which does not regulate the lengthening and shortening of the columns due to direct wind stresses by properly proportioning the girders to maintain the floors as planes after bending, the irregular lengthening and shortening of the columns will produce secondary bending stresses in the girders which may become excessive in very tall frames. Spurr's method recognizes this and, therefore, uses the cantilever method of calculation (see Art. 54) and employs the methods of girder proportioning described in Art. 58.

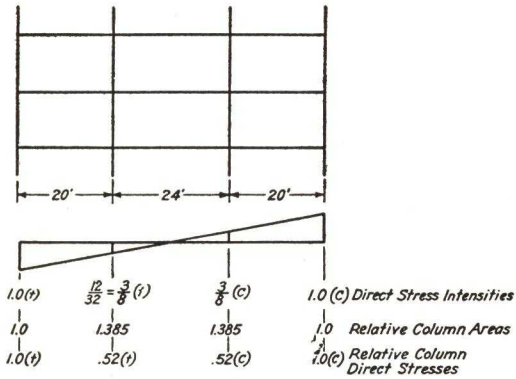

Fig. 87

If the unit stresses in the columns due to direct wind stress are proportional to the distances from the neutral axis of the bent, as shown in Fig. 76, the plane of the floor girders remains plane after bending and the secondary bending stresses in the girders are eliminated.

To illustrate the method, the same bent which was used in the portal design, Art. 59, and shown in Fig. 83, will be used. The required column sizes for dead and live loads for the sixth story are given in Art. 59.

$$\text{Column } A\text{, req. area} = \frac{756{,}800}{16{,}370} = 46.2 \text{ sq in.} \qquad 14'' \text{ WF } 158 \text{ lb}$$

$$\text{Column } B\text{, req. area} = \frac{1{,}063{,}300}{16{,}400} = 64.8 \text{ sq in.} \qquad 14'' \text{ WF } 219 \text{ lb}$$

The relative stresses and column areas are shown in Fig. 87.

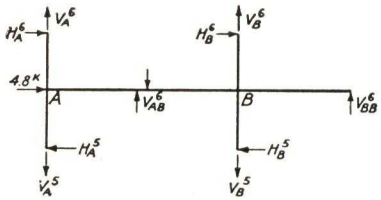

Fig. 88

From this relationship the direct stresses in the columns for any story may be figured from a single moment equation, and from these the girder and column shears may be determined. These are shown for the fifth and sixth-story columns and the sixth-floor girders in Fig. 88. The direct stress in the *fifth-*

story column A is

$$V_A^5 \times 64 + 0.52V_A^5 \times 24 = 16 \times 4.8 \times 8 \times 12 = 7372.8 \text{ ft-kips}$$

$$V_A^5 = \frac{7372.8}{76.48} = 96.4 \text{ kips}(t)$$

The denominator, 76.48 ft., is called the *equivalent base.* (See Art. 54.)

$$V_B^5 = 0.52 \times 96.4 = 50.1 \text{ kips}(t)$$

$$V_A^6 = 84.7 \text{ kips}(t) \qquad V_B^6 = 44.0 \text{ kips}(t)$$

$$V_{AB}^6 = 96.4 - 84.7 = 11.7 \text{ kips}$$

$$V_{BB}^6 = 11.7 + 50.1 - 44.0 = 17.8 \text{ kips}$$

$$\frac{H_A^5}{H_A^6} = \frac{H_5}{H_6} = \frac{76.8}{72.0} = 1.067$$

From moments at A,

$$(H_A^6 + 1.067H_A^6)6.0 = V_{AB}^6 \times 10 = 117.0 \text{ ft-kips}$$

$$H_A^6 = 9.4 \text{ kips}$$

From moments at B,

$$(H_B^6 + 1.067H_B^6)6.0 = V_{AB}^6 \times 10 + V_{BB}^6 \times 12$$

$$H_B^6 = 26.6 \text{ kips}$$

The stresses in the *sixth-story column A* are

$$\text{Wind direct} = 84.7 \text{ kips}$$

$$\text{Wind bending} = 9.4 \times 6.0 = 56.4 \text{ ft-kips}$$

For the 14″ WF 158 lb, the maximum fiber stress due to wind is

$$\text{Direct} = \frac{84.7}{46.47} = 1825 \text{ psi}$$

$$\text{Bending} = \frac{56.4 \times 12}{253.4} = 2660 \text{ "}$$

$$\text{Total} = \overline{4485} \text{ "}$$

This is less than one-third the allowed unit stress for dead and live load (16,370 psi). The section will do.

Sixth-Story Column B

$$\text{Direct stress} = 44.0 \text{ kips}$$

$$\text{Bending} = 26.6 \times 6.0 = 159.6 \text{ ft-kips}$$

For the 14″ WF 219 lb, the maximum fiber stress due to wind is

$$\text{Direct} = \frac{44.0}{64.36} = 685 \text{ psi}$$

$$\text{Bending} = \frac{159.6 \times 12}{352.6} = 5425 \text{ "}$$

$$\text{Total} = \overline{6110} \text{ "}$$

This is greater than one-third the allowed unit stress for dead and live load (16,400) and the section must be increased.

Try 14″ WF 228 lb $A = 67.06$ in.^{2} $I = 2942.4$ in.^{4} $S = 367.8$ in.^{3}

$$\text{Direct, D.L.} + \text{L.L.} + \text{Wind} = \frac{1063.6 + 44.0}{67.06} = 16{,}465 \text{ psi}$$

$$\text{Bending} = \frac{159.6 \times 12}{367.8} = 5{,}210 \text{ "}$$

$$\text{Total} = \overline{21{,}675} \text{ "}$$

$1\frac{1}{3} \times 16{,}400 = 21{,}867$ psi; therefore, this section will do.

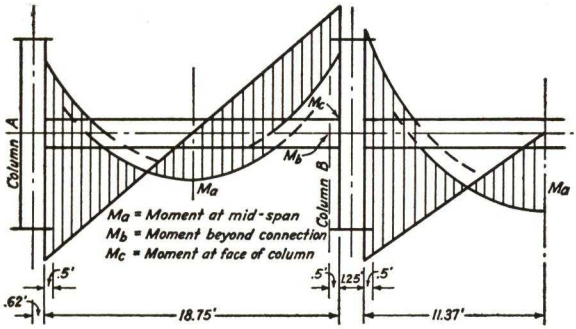

(1) Dead $M_a = \frac{1}{2} \times 95.62 = 47.8$ ft-kips $\quad M_a = \frac{1}{2} \times 163.6 = 81.8$ ft-kips

(2) + Live $M_b = 63.8 - 9.8 = 54.0$ ft-kips $\quad M_b = 109.1 - 14.1 = 95.0$ ft-kips

(3) load $M_c = \frac{2}{3} \times 95.62 = 63.8$ ft-kips $\quad M_c = \frac{2}{3} \times 163.6 = 109.1$ ft-kips

(4) Wind $M_b = 11.7 \times 8.87 = 103.8$ ft-kips $\quad M_b = 17.8 \times 10.87 = 193.5$ ft-kips

(5) Wind $M_c = 11.7 \times 9.37 = 109.6$ ft-kips $\quad M_c = 17.8 \times 11.37 = 198.9$ ft-kips

(6) Total $M_b = 157.8$ Req. $S = 71.0$ in.^{3} $\quad M_b = 288.5$ Req. $S = 129.8$ in.^{3}

(7) Reqd. for strength 16″ WF 45# $I = 583.3$ in.^{4} $\quad$ 18″ WF 77# $I = 1286.8$ in.^{4}

(8) From equation [2] $\dfrac{I_{AB}}{I_{BB}} = \dfrac{11.7 \times 400}{17.8 \times 576} = 0.455$

(9) Elastic req. $I_{AB} = 583.3$ in.^{4} $\quad I_{BB} = \dfrac{583.3}{0.455} = 1282$ in.^{4}

(10) Use 16″ WF 45# $I = 583.3$ in.^{4} $\quad$ 18″ WF 77# $I = 1286.8$ in.^{4}

Fig. 89

Girder Design. The design of the girders is worked out in Fig. 89,

which is similar to Fig. 85. The elastic requirements of this method are satisfied with the girder sizes required for strength.

Bent Deflection. From the equations of Art. 60,

$$\theta_6 = \frac{11.7(20 \times 12)^2}{12E \times 583.3} = \frac{96.2}{E} \qquad \text{From [16]}$$

$$\phi_A^6 = \frac{9.4(12 \times 12)^2}{12E \times 1900.6} = \frac{8.55}{E} \qquad \text{From [14]}$$

$$\phi_B^6 = \frac{26.6(12 \times 12)^2}{12E \times 2942} = \frac{15.6}{E} \qquad \text{From [15]}$$

$$\theta_A^6 = \frac{96.2}{E} + \frac{3.5}{E} = \frac{99.7}{E} \qquad \text{From [18]}$$

$$\theta_B^6 = \frac{96.2}{E} - \frac{3.5}{E} = \frac{92.7}{E} \qquad \text{From [19]}$$

$$x = \frac{2E \times 583.3(199.4 + 92.7)}{240 \times 11.7E} = 121 \text{ in.} \qquad \text{From [20]}$$

$$y = L - x = 119 \text{ in.}$$

$$\text{Web drift per panel} = \Delta = (\theta_A^6 + \phi_A^6)h = 0.537 \text{ in.}$$

$$\frac{\Delta}{h} = \frac{0.537}{144} = 0.0037$$

From equation [21] the chord drift will be

$$\Delta = \frac{2 \times 1825 \times (12 \times 180)^2}{3E \times 12 \times 64} = 0.255 \text{ in.}$$

$$\frac{\Delta}{n} = \frac{0.255}{12 \times 180} = 0.0001$$

The total drift will be

$$\begin{aligned} \text{Web drift} &= 0.0037h \\ \text{Chord drift} &= \underline{0.0001h} \\ \text{Total} &= 0.0038h \end{aligned}$$

62. Calculations for a Tower Building.* Figure 90 shows a typical floor plan for a tower building of some 40 odd stories and 500 ft high. Calculations for the allocation of wind load to the bents and examples of design calculations by the Spurr method will be given.

* This discussion is based upon the *Third Progress Report* of the Committee on Wind Bracing, *Proc. Am. Soc. Civil Engrs.*, December, 1933, p. 1621.

The dead load of the floors will be taken as 130 lb per sq ft and the average live load as 30 lb per sq ft. The exterior walls will be assumed

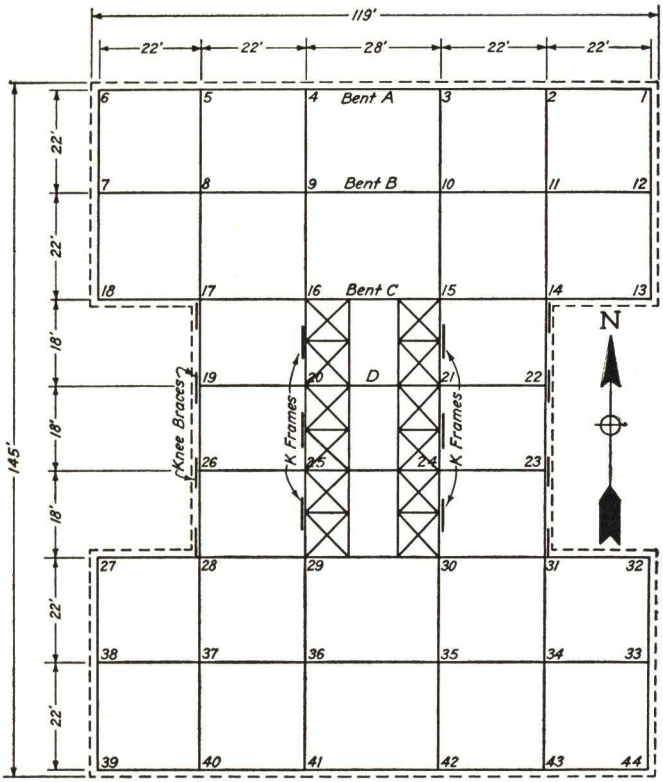

Fig. 90

to weigh 80 lb per sq ft of gross wall area. From these the estimate of the column loads, 30 stories down from the top, due to gravity loads is made. (See table, p. 110.)

The east-west wind will be resisted by the eight bents *A*, *B*, *C*, and *D*, and these are assumed to have shallow girder connections only. In the north-south direction there are K-frames back of the elevator banks and knee braces between columns 17, 19, 26, 28 and 14, 22, 23, 31, as indicated on Fig. 90.

As stated in Art. 49, the various bents in a given direction will take lateral loads in proportion to their rigidities. Since the relative sectional areas of the columns are known, approximately, it is convenient

Column Gravity Loads

Column No.				*Ratio*
	Floor	$22 \times 11 \times 160 = 38{,}720 \times 30$	1161.6^k	
2–5	Wall	$22 \times 12 \times 80 = 21{,}120 \times 29\frac{1}{2}$	623.0	
7–12	Col. wt.	$30 \times 12 \times 180$	64.8	
			1849.4^k	1.0
	Floor	$11 \times 11 \times 160 = 19{,}360 \times 30$	580.8^k	
1–6	Wall	$(22 + 2) \times 12 \times 80 = 23{,}040 \times 29\frac{1}{2}$	679.7	
13–18	Col. wt.	$30 \times 12 \times 130$	46.8	
			1307.3^k	0.71
	Floor	$11 \times 25 \times 160 = 44{,}000 \times 30$	1320.0^k	
	Wall	$25 \times 12 \times 80 = 24{,}000 \times 29\frac{1}{2}$	708.0	
3–4	Col. wt.	$30 \times 12 \times 210$	75.6	
			2103.6^k	1.14
	Floor	$(2 \times 121 + 9 \times 11)160 = 54{,}560 \times 30$	1636.8^k	
	Wall	$(20 - 2) \times 12 \times 80 = 17{,}280 \times 29\frac{1}{2}$	509.8	
14–17	Col. wt.	$30 \times 12 \times 210$	75.6	
			2222.2^k	1.20
	Floor	$11 \times 18 \times 160 = 31{,}680 \times 30$	950.4^k	
	Wall	$18 \times 12 \times 80 = 17{,}280 \times 29\frac{1}{2}$	509.8	
19–22	Col. wt.	$30 \times 12 \times 150$	54.0	
			1514.2^k	0.82
	Floor	$22 \times 22 \times 160 = 77{,}440 \times 30$	2323.2^k	
8–11	Col. wt. + FP* =	$30 \times 12(240 + 250)$	176.4	
			2499.6^k	1.35
	Floor	$22 \times 25 \times 160 = 88{,}000 \times 30$	2640.0^k	
9–10	Col. wt + FP =	$30 \times 12(270 + 250)$	187.2	
			2827.2^k	1.53
	Floor	$20 \times 25 \times 160 = 80{,}000 \times 30$	2400.0^k	
15–16	Col. wt. + FP =	$30 \times 12(240 + 250)$	176.4	
			2576.4^k	1.39
	Floor	$18 \times 25 \times 160 = 72{,}000 \times 30$	2160.0^k	
20–21	Col. wt. + FP =	$30 \times 12(230 + 240)$	169.2	
			2329.2^k	1.26

* Fireproofing.

to base the calculation of relative rigidities on chord action alone, since the relative web deflections can be controlled.

Figure 91 gives the relative stiffnesses of the four bents. These are calculated in line (5) by a moment equation, using a unity unit stress in the columns 58 ft from the neutral axis. From these the proportions of the total wind shear carried by each bent may be determined. They are summarized in the table.

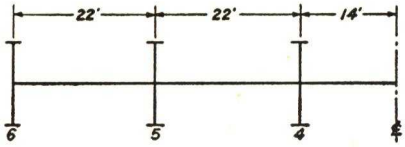

(6)	(5)	(4)	*Bent A*
1.0	$\frac{36}{58} = 0.621$	$\frac{14}{58} = 0.241$	Unit stress ratios
0.71	1.0	1.14	Relative column areas
0.71	0.621	0.275	Total stress ratios
$2[(0.71 \times 58) + (0.621 \times 36) + (0.275 \times 14)] = 134.77$			stiffness coefficient
(7)	(8)	(9)	*Bent B*
1.0	0.621	0.241	Unit stress ratios
1.0	1.35	1.53	Relative column areas
1.0	0.838	0.369	Total stress ratios
$2[(1.0 \times 58) + (0.838 \times 36) + (0.369 \times 14)] = 186.68$			stiffness coefficient
(18)	(17)	(16)	*Bent C*
1.0	0.621	0.241	Unit stress ratios
0.71	1.20	1.39	Relative column areas
0.71	0.745	0.335	Total stress ratios
$2[(0.71 \times 58) + (0.745 \times 36) + (0.335 \times 14)] = 145.38$			stiffness coefficient
	(19)	(20)	*Bent D*
	0.621	0.241	Unit stress ratios
	0.82	1.26	Relative column areas
	0.509	0.304	Total stress ratios
	$2[(0.509 \times 36) + (0.304 \times 14)] = 45.16$		stiffness coefficient

Fig. 91

Bent	*Stiffness Coefficient*	*Percentage*	*Wind Shear*
A	134.77	13.2	147.7 kips
B	186.68	18.1	202.5 "
C	145.38	14.3	159.9 "
D	45.16	4.4	49.2 "
	511.99	50.0	559.3 "

Figure 92 shows the assumed wind load on the building according to the recommendations of the Committee on Wind Bracing. (See Art. 6.) From this the total wind shear in the story under consideration (30 stories down from the top) is 145 (206 × 22.5 + 154 × 20) = 1118.6 kips. This is proportioned among the bents in the table above. The total wind shear in the next story below is 1153.4 kips.

The wind overturning moment for the story in question, for bent *B*, is

$$0.181 \times 145\left[360 \times 20 \times 180 + \frac{206 \times 5}{2}(154 + \tfrac{2}{3} \times 206)\right] = 37{,}951 \text{ ft-kips}$$

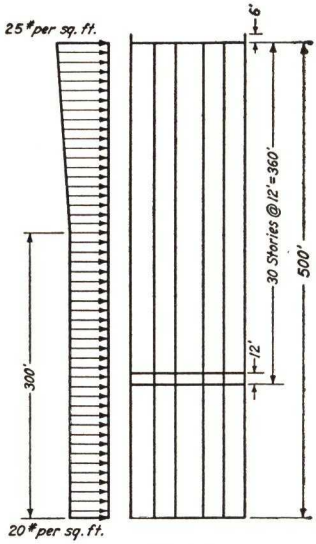

Fig. 92

Figure 93 shows the moments, shears, and direct stresses for the story under consideration. From these the calculations for the columns are made as given in the table below.

These unit stresses due to wind are all less than one-third the allowed unit stresses for dead and live loads (16,450) and, therefore, the sections will not need to be increased.

The girder designs are worked out in a similar manner under Fig. 94. As in Art. 59, the floor slab is assumed to be reinforced in two directions, and the bending moments due to floor loads are calculated for the clear spans of the girders by the formulas of Art. 13.

The required sizes for strength are as near the relative required sizes for equal drift as commercial sizes will give.

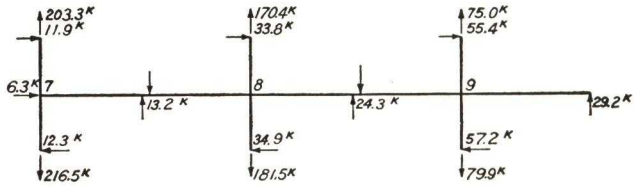

Bent B

Fig. 93

Column Design

	Column 7	Column 8	Column 9
Dead + Live load	Stress 1849.4^k	2499.6^k	2827.2^k
	Area $\frac{1849.4}{16,450} = 112.4$ sq in.	$\frac{2499.6}{16,450} = 151.9$ sq in.	$\frac{2827.2}{16,450} = 171.9$ sq in.
	Size 14″WF 384# = 112.93 sq in.	14″WF 320# = 94.12 2–18″×1⅝″ = 58.50 Area = 152.62 sq in.	14″WF 320# = 94.12 2–18″×2 3/16″ = 78.75 Area = 172.87 sq in.
	$I = 5227.5$ in.^{4}	$I = 9093$ in.^{4}	$I = 11249$ in.^{4}
Wind load	Direct $\frac{37,951}{186.68} = 203.3^k$	$0.838 \times 203.3 = 170.4^k$	$0.369 \times 203.3 = 75.0^k$
	Shear 11.9^k	33.8^k	55.5^k
	Bending $11.9 \times 6 = 71.4'^k$	$33.8 \times 6 = 202.8'^k$	$55.5 \times 6 = 333.0'^k$
	$\frac{D}{A} = \frac{203.3}{112.93} = 1800$	$\frac{170.4}{152.62} = 1120$	$\frac{75.0}{172.87} = 430$
	$\frac{Mc}{I} = \frac{71.4 \times 12}{632.2} = 1360$	$\frac{202.8 \times 12}{907} = 2680$	$\frac{333.0 \times 12}{1062} = 3760$
	Total = 3160 psi	Total = 3800 psi	Total = 4190 psi

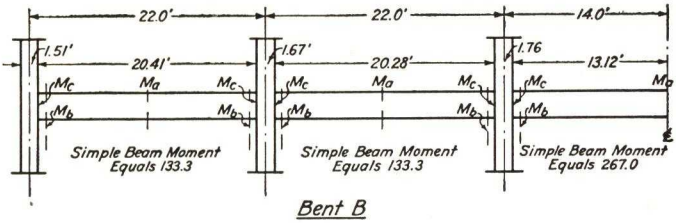

Bent B

Dead + Live	$M_a = \frac{1}{2} \times 133.3 = 66.7'^{k}$	$M_a = \frac{1}{2} \times 133.3 = 66.7'^{k}$	$M_a = \frac{1}{2} \times 267.0 = 133.5'^{k}$
	$M_b = 88.8 - 12.9 = 75.9'^{k}$	$M_b = 88.8 - 12.9 = 75.9'^{k}$	$M_b = 178.0 - 20.0 = 158.0'^{k}$
	$M_c = \frac{2}{3} \times 133.3 = 88.8'^{k}$	$M_c = \frac{2}{3} \times 133.3 = 88.8'^{k}$	$M_c = \frac{2}{3} \times 267.0 = 178.0'^{k}$
Wind	$M_c = 13.2 \times 10.2 = 134.6'^{k}$	$M_c = 24.3 \times 10.14 = 246.4'^{k}$	$M_c = 29.2 \times 13.12 = 383.1'^{k}$
	$M_b = 13.2 \times 9.7 = 128.0'^{k}$	$M_b = 24.3 \times 9.64 = 234.2'^{k}$	$M_b = 29.2 \times 12.62 = 368.5'^{k}$
Total	$M_b = 203.9'^{k}$	$M_b = 310.1'^{k}$	$M_b = 526.5'^{k}$
	Req. $S = 91.6$ in.^{3}	$S = 139.6$ in.^{3}	$S = 237.0$ in.^{3}
Req. for Strength	16″ WF 58# $I = 746.4$ in.^{4}	18″ WF 77# $I = 1286.8$ in.^{4}	21″ WF 112# $I = 2620.6$ in.^{4}
VL^2	$13.2\,(22)^2 = 6389$	$24.3\,(22)^2 = 11{,}761$	$29.2\,(28)^2 = 22{,}893$
Relative req. I Equation [2]	1.0	1.84	3.58
Min. req. I	746.4 in.^{4}	$1.84 \times 746.4 = 1373$ in.^{4}	$3.58 \times 746.4 = 2672$ in.^{4}

Fig. 94

The deflections of the bent will now be calculated by the formulas of Art. 60.

$$\text{For girder 7–8} \quad \text{Average } \theta = \frac{13.2(22 \times 12)^2}{12E \times 746.4} = \frac{102.7}{E}$$

$$\text{For girder 8–9} \quad \text{Average } \theta = \frac{24.3(22 \times 12)^2}{12E \times 1286.8} = \frac{109.7}{E}$$

$$\text{For girder 9–9} \quad \text{Average } \theta = \frac{29.2(28 \times 12)^2}{12E \times 2620.6} = \frac{104.8}{E}$$

$$\text{For the girders the average } \theta = \frac{105.7}{E}$$

$$\text{For column 7,} \quad \phi = \frac{11.9(12 \times 12)^2}{12E \times 5227} = \frac{4.0}{E}$$

$$\text{For column 8,} \quad \phi = \frac{33.8(12 \times 12)^2}{12E \times 9093} = \frac{6.4}{E}$$

$$\text{For column 9,} \quad \phi = \frac{55.5(12 \times 12)^2}{12E \times 11{,}249} = \frac{8.5}{E}$$

The average value of $\phi = \frac{6.3}{E}$. The panel drift due to girder and column flexure is $\frac{\Delta}{h} = (\theta + \phi) = \frac{112}{E} = 0.00386$.

Chord Drift. Assuming that the fiber stress due to wind increases directly as the distance down from the top, the unit stress at the bottom of the outside column will be

$$s = \frac{1800 \times 500}{354} = 2540 \text{ psi}$$

$$n = 500 \text{ ft}$$

$$b = 116 \text{ ft}$$

$$\Delta = \frac{2 \times 2540 \times (500)^2}{3E \times 116} = 0.126 \text{ ft, from equation [21]}$$

$$\frac{\Delta}{h} = \frac{0.126}{500} = 0.0003$$

The total drift is $0.0039h + 0.0003h = 0.0042h$, which is greater than should be allowed in a building of this height. We will endeavor to reduce the drift to $0.003h$, as recommended by Spurr. (See Art. 57.) The major portion of the drift is due to girder flexure, so we will increase the sizes of the girders. If the total $\frac{\Delta}{h} = 0.003$, then $\theta + \phi = 0.0030 - 0.0003 = 0.0027$. The average value of ϕ for the columns is $\frac{6.3}{E}$. $\frac{13.2(22 \times 12)^2}{12EI} + \frac{6.3}{E} = 0.0027$. Solving this for I we get, $I = 1060$ in.^{4} This is for the girder 7–8. The required I's for the other girders are: for girder, 8–9, $I = 1.84 \times 1060 = 1950$; and, for girder 9–9, $I = 3.58 \times 1060 = 3790$. The nearest commercial sizes will be: for girder 7–8, 18″ WF 64# $I = 1045.8$; for girder 8–9, 21″ WF 89# $I = 1919.2$; and, for girder 9–9, 27″ WF 106# $I = 3761.2$.

63. Design of Lower Stories.* The design procedures previously discussed assume that practical girder sections can always be found which will cause all column contraflexure points to fall at or near the midstory and thus produce substantially equal joint rotations at the top and bottom of the columns in each story. However, in the lower story of a building, the angular rotation of the column footing should be practically zero. If this is so, the contraflexure points in the columns of the lower story must fall above the midstory, the exact height depending upon the relative stiffness of the columns and girders. A practical solution in designing is to set the contraflexure points in the basement columns far enough above the midstory so that reasonable girder sizes can be found which will meet the elastic requirements. For economy, several stories directly above should be similarly designed in order to grade gradually into regularity. Such a group of stories (4 to 6) may be called *transition stories.* In the lower portion of the bent, the web drift is necessarily a curve instead of a straight line, such as $0.0025h$ per story, or some other figure which may be established for the upper, regular stories. Values of θ for the floor girders of the transition stories may be selected somewhat arbitrarily, starting with say $\theta = 0.0025$ at the fifth floor and decreasing until $\theta = 0$ at the base.

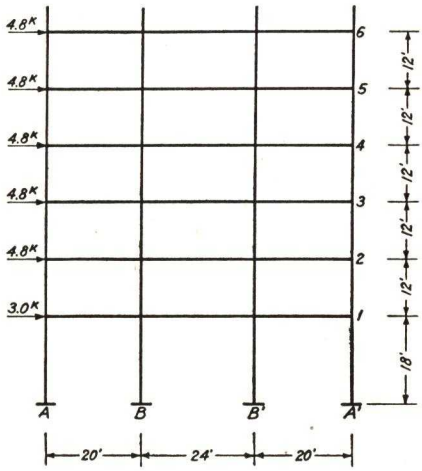

Fig. 95

Figure 95 shows the lower six stories of the bent designed in Art. 61 by the Spurr method. The basement story is made 18 ft. The other stories are each 12 ft. The columns are made in two-story lengths with splices at the even-numbered floors. The requirements for dead and live load are shown in the tables on p. 116.

The direct stresses and shears for wind are shown in the tables on p. 117. These are calculated for contraflexure points at the midstory except for the basement story, where the height was taken as 12 ft above

* This discussion is based on "Tests and Design of Steel Wind Bents for Tall Buildings," by Large, Carpenter, and Morris, *Bulletin* 93, Engineering Experiment Station, Ohio State University.

SCHEDULE FOR COLUMN A

Story	D. L. + L. L. Kips	Column Section		L/r	Allowed psi	Req. A in.^{2}
6 & 7	756.8	14″WF 158#	A = 46.47 I = 1900.6 K = 13.2	$\frac{144}{4.0}$	16,370	46.2
4 & 5	861.0	14″WF 184#	A = 54.07 I = 2274.8 K = 15.8	$\frac{144}{4.04}$	16,380	52.6
2 & 3	965.2	14″WF 202#	A = 59.39 I = 2538.8 K = 17.6	$\frac{144}{4.06}$	16,380	59.0
1st	1017.3	14″WF 237#	A = 69.69 I = 3080.9 K = 21.4			
Base-ment	1069.4	14″WF 237#	A = 69.69 I = 3080.9 K = 14.3	$\frac{216}{4.1}$	15,660	68.2

SCHEDULE FOR COLUMN B

Story	D. L. + L. L. Kips	Column Section		L/r	Allowed psi	Req. A in.^{2}
6 & 7	1063.3	14″WF 228#	A = 67.06 I = 2942.4 K = 20.4	$\frac{144}{4.1}$	16,400	64.7
4 & 5	1211.3	14″WF 255#	A = 74.98 I = 3372.6 K = 23.4	$\frac{144}{4.13}$	16,420	73.8
2 & 3	1359.3	14″WF 287#	A = 84.37 I = 3912.1 K = 27.2	$\frac{144}{4.17}$	16,420	82.7
1st	1433.3	14″WF 328#	A = 96.43 I = 4656.1 K = 32.4			
Base-ment	1507.3	14″WF 328#	A = 96.43 I = 4656.1 K = 21.6	$\frac{216}{4.22}$	15,720	95.8

the base. These stresses may be corrected later when the true locations of the contraflexure points have been determined.

WIND STRESSES *

Story	Column A	Girder AB	Column B	Girder BB
6th	$D = 84.7$ $H = 9.4$ $M = 56.4$	$V = 11.7$	$D = 44.0$ $H = 26.6$ $M = 159.6$	$V = 17.8$
5th	$D = 96.4$ $H = 10.1$ $M = 60.6$	$M = 117.0$ $V = 12.4$	$D = 50.1$ $H = 28.3$ $M = 169.8$	$M = 213.6$ $V = 18.8$
4th	$D = 108.8$ $H = 10.7$ $M = 64.2$	$M = 124.0$ $V = 13.2$	$D = 56.5$ $H = 30.1$ $M = 180.6$	$M = 225.6$ $V = 20.2$
3rd	$D = 122.0$ $H = 11.4$ $M = 68.4$	$M = 132.0$ $V = 13.9$	$D = 63.5$ $H = 31.8$ $M = 190.8$	$M = 242.4$ $V = 21.1$
2nd	$D = 135.9$ $H = 12.0$ $M = 72.0$	$M = 139.0$ $V = 14.7$	$D = 70.7$ $H = 33.6$ $M = 201.6$	$M = 253.2$ $V = 22.3$
1st	$D = 150.6$ $H = 12.6$ $M = 75.6$	$M = 147.0$ $V = 15.3$	$D = 78.3$ $H = 35.4$ $M = 212.4$	$M = 267.6$ $V = 23.3$
Basement	$D = 165.9$ $H = 13.0$ $M = 78.0$ (at top)	$M = 153.0$	$D = 86.3$ $H = 36.5$ $M = 219.0$	$M = 279.6$

* (Stresses in kips and moments in ft kips)

If the θ's are decreased from 0.0025 at the fifth floor, downward as the ordinates to a parabola, they will have the following values:

$$\theta_5 = 0.0025 \qquad \theta_2 = 0.0016$$

$$\theta_4 = 0.0024 \qquad \theta_1 = 0.0009$$

$$\theta_3 = 0.0021 \qquad \theta_0 = 0.0000$$

From the slope deflection equation, assuming the girder contraflexure

points to be at their midlength,

$$M_{AB} = 2EK_a(3\theta) = V_{AB} \times \frac{L_a}{2}$$

$$K_a = \frac{V_{AB}L_a}{12E\theta} \qquad [22]$$

From this equation the required values of K for the girders of panel AB may be calculated. The girders of panel BB must be proportional to those of panel AB, as required by equation [2]. The required moments of inertia for the girders and the nearest commercial sizes are given in the following table. The required moment of inertia of girder BB is obtained by dividing the moment of inertia of girder AB by 0.455. (See Art. 61, Fig. 89.)

GIRDER SIZES IN THE TRANSITION STORIES

Floor	Req. K	Req. I	Girder AB	Req. I	Girder BB
6	2.92	700 in.^{4}	18″WF 47# I = 736.4 in.^{4}	1620 in.^{4}	21″WF 73# I = 1600.3 in.^{4}
5	3.10	744	18″WF 47# I = 736.4	1620	21″WF 73# I = 1600.3
4	3.44	825	18″WF 50# I = 800.6	1760	21″WF 82# I = 1752.4
3	4.14	992	18″WF 64# I = 1045.8	2300	21″WF 103# I = 2268.0
2	5.75	1380	21″WF 63# I = 1343.6	2960	24″WF 100# I = 2987.3
1	10.62	2545	21″WF 112# I = 2620.6	5760	27″WF 154# I = 5775.8

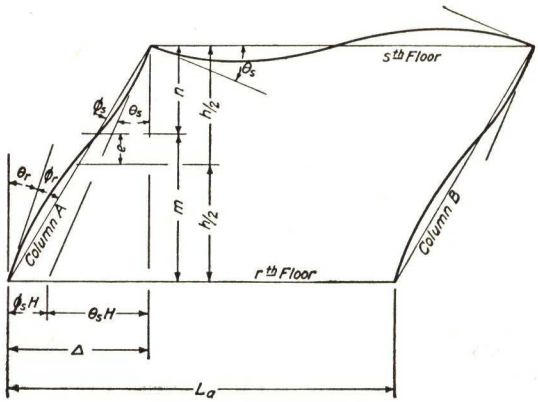

Fig. 96

Figure 96 shows the shift in the contraflexure point in the column due to the difference in the values of θ at the top and bottom. From slope deflection,

$$M_A^{rs} = 2EK_A(2\theta_r + \theta_s - 3R) = H_A n \quad \text{Moment at the top}$$

$$M_A^{sr} = 2EK_A(2\theta_s + \theta_r - 3R) = H_A m \quad \text{Moment at the bottom}$$

Subtracting,

$$H_A(m - n) = 2EK_A(\theta_s - \theta_r)$$

Let e = distance from the midstory point to the contraflexure point. Then

$$e = \frac{m - n}{2} = \frac{EK_A(\theta_s - \theta_r)}{H_A} \qquad [23]$$

From this equation the points of contraflexure can be located and corrections made in the calculations of the direct stresses, shears, and moments in the columns and girders.

The eccentricities of the contraflexure points in the columns of the transition stories are:

$e_5 = 0$	$e_2 = 21.3$ in. $= 1.77$ ft
$e_4 = 4.3$ in. $= 0.36$ ft	$e_1 = 34.5$ in. $= 2.87$ ft
$e_3 = 13.4$ in. $= 1.12$ ft	$e_0 = 28.7$ in. $= 2.39$ ft

Using these eccentricities, the column direct stresses will be affected slightly, as will also the girder shears. The column shears are not changed. The column moments will, of course, be larger at the bottom of each story than at the top.

CHAPTER VIII

ASYMMETRY

64. General Discussion. Few buildings are symmetrical about two axes in both exterior exposure and the arrangement of bracing. Even on a symmetrical building the distribution of wind force may not be symmetrical with the building due to surrounding structures; and the pressure will not be uniform or symmetrical on any face when the wind is not normal to one face of the structure.* However, the distribution of the wind pressure is too uncertain to justify calculation of stresses in symmetrical structures for oblique wind loads. In any case the greatest stresses will usually occur with the wind normal to one face.

The following treatment of unsymmetrical structures is based on a study made by Professor George E. Large† and presented to the Committee on Wind Bracing of the American Society of Civil Engineers. Professor Large calls attention to the following previous articles on the subject: (1) "Wind Bracing," by Albert Smith, *Journal of the Western Society of Engineers,* February, 1933, page 1; (2) *Continuity in Concrete Building Frames,* published by the Portland Cement Association in 1937.

65. Unsymmetrical Floor Plan. Figure 97 shows two cases of unsymmetrical floor plan with assumed uniform wind loads. Figure 97(*a*) is unsymmetrical in only one direction. With wind blowing from the north or south, the resisting bents of the building are symmetrical. Figure 97(*b*) is unsymmetrical with respect to both axes.

For symmetrical towers the center of rotation for unsymmetrical loads is about the geometric axis of the tower. This will be taken up in Art. 80, on transmission towers. For buildings of unsymmetrical floor plan the center of rotation is at the centroid of the stiffnesses, or resisting values, of all wind bents in both directions. In Fig. 97(*b*), the torsional moment $H_w e$ is resisted by the four east-west bents plus the three north-south bents. The stiffness of a wind bent may be defined as the load required to deflect it, laterally, a unit distance.

* "Wind Forces on a Tall Building," by J. Charles Rathbun, *Trans. Am. Soc. Civil Engrs.,* Vol. 105, 1940, p. 1.

† *Proc. Am. Soc. Civil Engrs.,* June, 1939, p. 988.

See also *Theory of Modern Steel Structures,* by L. E. Grinter, 1936, p. 871.

In analyzing an unsymmetrical building, the wind pressure, H, is resolved into a normal force equal to H, acting at the centroid of the stiffnesses, and a couple He. In Fig. 97(b) the four east-west bents will share the normal force H_w, in the ratio of their respective stiff-

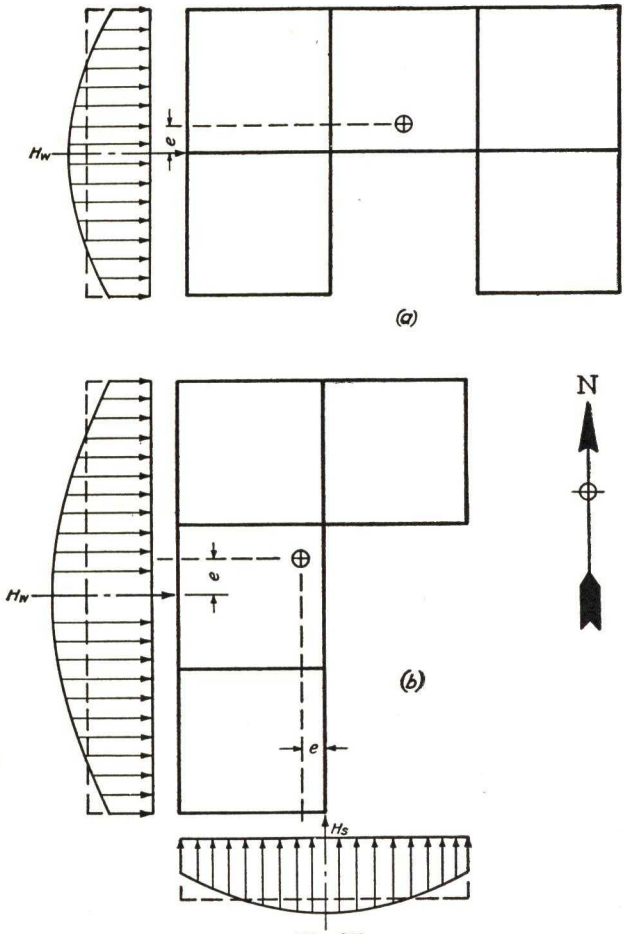

Fig. 97

nesses, all bents deflecting eastward an equal amount under this component acting at the centroid of the plan. The torsional moment, $H_w e$, will be resisted by all of the seven bents (4 east-west and 3 north-south). The resisting moments of these seven bents will be proportional to their respective distances from the centroid, and also in proportion to their relative stiffnesses.

66. Bent Stiffness. There are four factors affecting the deflection of a bent and, consequently, its stiffness. They are

1. Girder flexure.
2. Column flexure.
3. Direct deformation of the columns (chord deflection).
4. Connection deformation.

Connection deformation is usually difficult to estimate and will not be used in this analysis. Of these four, *girder flexure* is the largest. The relative stiffness of the bents may be determined by using any one of these factors, or any combination of two, or all of them. The *stiffness ratios* so determined usually will not vary greatly. Presumably, the ratios obtained by using all the factors are the most accurate. Mr. Albert Smith used the first two. A combination of (1) and (3) gives noticeably better results than Mr. Smith's method, (1) and (2), and a quick approximation, which is frequently sufficiently accurate, may be obtained by considering girder flexure (1) alone. In the Spurr method (Art. 62) the relative stiffnesses of the bents were calculated from *chord deflections* (3) alone. (See Fig. 91.) The relative stiffnesses are also affected to some extent by the method of design used (cantilever or portal).

Girder Flexure. Referring to Fig. 84, the deflection due to girder flexure is

$$\Delta_G = \theta h = \frac{VL^2h}{12EI_G} \quad \text{(see equation [15], Art. 60)} \qquad [1]$$

in which Δ_G = deflection per story due to girder flexure,

h = story height,

V = girder shear,

L = girder length,

I_G = moment of inertia of girder.

In order to determine the deflection of the bent per story, the value of Δ_G should be determined for each panel and the average used.

Column Flexure. Again referring to Fig. 84, the deflection due to column flexure is

$$\Delta_c = \phi h = \frac{H_c\, h^3}{12EI_c} \quad \text{(see equation [14], Art. 60)} \qquad [2]$$

in which Δ_c = deflection per story due to column flexure,

h = story height,

H_c = column shear,

I_c = moment of inertia of column.

Again, the average value of Δ_c for all the columns of the bent should be used.

Chord Deflection. From equation [21], Art. 60,

$$\Delta_D = \frac{2sn^2}{3Eb}$$

in which Δ_D = total deflection of top of bent due to chord action,

s = unit stress in outer columns at the base due to direct wind stress,

n = total height of bent,

b = total width of bent.

As shown in Fig. 86, the chord deflection is not uniform per story but for purposes of comparison with the other deflections the average deflection may be used. Multiplying by h/n the average per story then becomes

$$\Delta_s = \frac{2snh}{3Eb} \qquad [3]$$

67. Unsymmetrical Tower. Figure 98 shows the floor plan of an unsymmetrical tower, twenty-five stories down from the top, with the column and girder sizes indicated. The stories are 12 ft, floor to floor, and the wind load is 20 lb per sq ft of exposed surface. First we will consider that the wind is blowing from the west, and that the portal method of design is employed (Art. 53).

Bent AEI. This bent has two panels which are symmetrical about column E. The total wind shear will be designated by H. Then

$$H_A = H_I = \frac{H}{4} \quad \text{and} \quad H_E = \frac{H}{2}$$

By moments as in Fig. 74,

$$V = \frac{Hh}{2L}$$

$$\Delta_G = \frac{Hh^2L}{24EI_G} = \frac{H \times (144)^2 \times 264}{24E \times 2467.8} = 92.43\frac{H}{E} \quad \text{From equation [1]}$$

For columns A and I,

$$\Delta_c = \frac{Hh^3}{48EI_c} = \frac{H \times (144)^3}{48E \times 2671.4} = 23.29\frac{H}{E} \quad \text{From equation [2]}$$

For column E,

$$\Delta_c = \frac{Hh^3}{24EI_c} = \frac{H \times (144)^3}{24EI_c} = 29.98\frac{H}{E}$$

$$\text{Average } \Delta_c = 25.52\frac{H}{E}$$

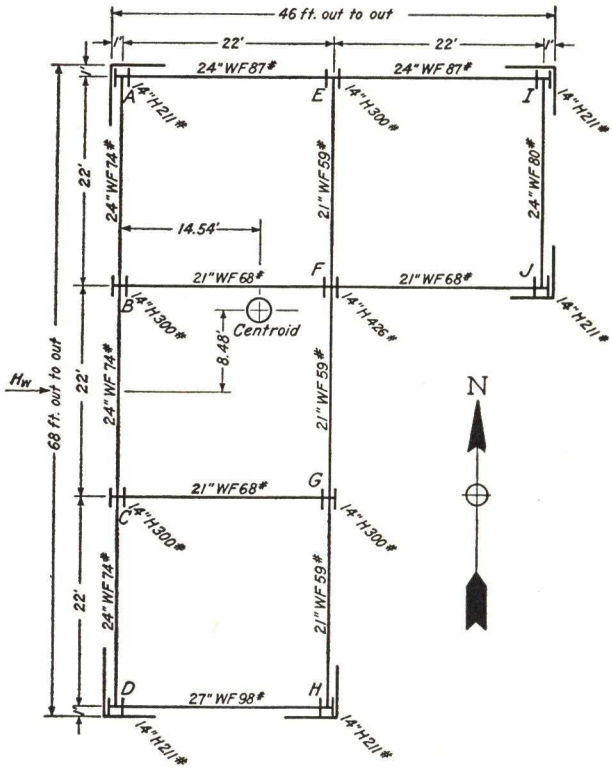

Fig. 98

The total direct stress due to wind, in the outer columns twenty-five stories down from the top, will be, by moments at the midstory,

$$D = \frac{H \times 12.5h}{b} = \frac{H \times 150}{44} = 3.41H$$

$$s = \frac{3.41H}{62.07} = 0.0549H$$

From equation [3],

$$\Delta_s = \frac{2 \times 0.0549H \times 300 \times 144}{3E \times 44} = 35.93\,\frac{H}{E}$$

The total deflection for

$$\text{Bent } AEI = (92.43 + 25.52 + 35.93)\,\frac{H}{E} = 153.88\,\frac{H}{E}$$

In a similar manner the deflection of

$$\text{Bent } BFJ = (154.30 + 19.03 + 25.30)\,\frac{H}{E} = 198.63\,\frac{H}{E}$$

$$\text{Bent } CG = (308.59 + 29.98 + 101.19)\,\frac{H}{E} = 439.76\,\frac{H}{E}$$

$$\text{Bent } DH = (132.36 + 46.57 + 143.74)\,\frac{H}{E} = 322.67\,\frac{H}{E}$$

$$\text{North-south bent } ABCD = (74.76 + 46.98 + 15.98)\,\frac{H}{E} = 137.72\,\frac{H}{E}$$

$$\text{North-south bent } EFGH = (121.96 + 38.98 + 13.20)\,\frac{H}{E} = 174.14\,\frac{H}{E}$$

$$\text{North-south bent } IJ = (204.60 + 120.96 + 143.74)\,\frac{H}{E} = 469.30\,\frac{H}{E}$$

Going back to the definition of *stiffness* given in Art. 65, that it is the load required to deflect the bent a unit distance, the deflections just calculated may each be set equal to unity and the value of H calculated. These values of H may be used as *stiffness coefficients*, which we will designate by K.

For bent AEI $\quad K_{AI} = \dfrac{E}{153.88} = 188.8^{\text{k}}$

For bent BFJ $\quad K_{BJ} = \dfrac{E}{198.63} = 146.0^{\text{k}}$

For bent CG $\quad K_{CG} = \dfrac{E}{439.76} = 65.9^{\text{k}}$

For bent DH $\quad K_{DH} = \dfrac{E}{322.67} = 89.8^{\text{k}}$

$$\sum K_{EW} = 490.5^{\text{k}}$$

For bent $ABCD$ $\quad K_{AD} = \dfrac{E}{137.72} = 210.6^{k}$

For bent $EFGH$ $\quad K_{EH} = \dfrac{E}{174.14} = 166.5^{k}$

For bent IJ $\quad K_{IJ} = \dfrac{E}{469.30} = 61.8^{k}$

$$\sum K_{NS} = 438.9^{k}$$

The centroid of stiffnesses can now be located.

By moments about bent AEI,

$$\frac{K_{BJ} \times 22 + K_{CG} \times 44 + K_{DH} \times 66}{\sum K_{EW}} = \frac{12038.4}{490.5} = 24.52 \text{ ft from } AEI$$

By moments about bent $ABCD$,

$$\frac{K_{EH} \times 22 + K_{IJ} \times 44}{\sum K_{NS}} = \frac{6382.2}{438.9} = 14.54 \text{ ft from } ABCD$$

The above dimensions are shown on Fig. 98. The total wind shear is $25 \times 12 \times 68 \times 20 = 408.0$ kips. This component, assumed acting at the centroid of stiffnesses, will be divided among the four east-west bents as shown in the following table.

Division of Direct Component

Bent	Stiffness	Percentage	Direct Load
AEI	188.8	38.5	157.1 kips
BFJ	146.0	29.8	121.6 "
CG	65.9	13.4	54.7 "
DH	89.8	18.3	74.6 "
$\sum$	490.5	100.0	408.0 "

The torsional moment for an east-west wind is $H_w e = 408 \times 8.48 = 3459.8$ ft-kips. This is resisted by the seven bents (4 east-west and 3 north-south) in proportion to their stiffnesses and to their distances from the centroid.

DISTRIBUTION OF TORSIONAL MOMENT

Bent	Stiffness	Distance	Distance × Stiffness	Force Ratio to *AEI*	Moment in Terms of *AEI*
AEI	188.8	24.52	4629.4	1.000	24.52
BFJ	146.0	2.52	367.9	0.080	0.20
CG	65.9	19.48	1283.7	0.277	5.40
DH	89.8	41.48	3724.9	0.805	33.39
ABCD	210.6	14.54	3062.1	0.661	9.61
EFGH	166.5	7.46	1242.1	0.268	2.00
IJ	61.8	29.46	1820.6	0.393	11.58
					86.70

$$86.70 \times AEI = 3459.8$$

$$AEI = 1.00 \times 39.9 = 39.9 \text{ kips west}$$

$$BFJ = 0.080 \times 39.9 = 3.2 \text{ kips west}$$

$$CG = 0.277 \times 39.9 = 11.0 \text{ kips east}$$

$$DH = 0.805 \times 39.9 = 32.1 \text{ kips east}$$

$$ABCD = 0.661 \times 39.9 = 26.4 \text{ kips south}$$

$$EFGH = 0.268 \times 39.9 = 10.7 \text{ kips north}$$

$$IJ = 0.393 \times 39.9 = 15.7 \text{ kips north}$$

As a check on the values given, the east-west forces and the north-south forces each add up to zero.

The total horizontal forces on each bent, in kips, are given in the table below:

Bent	Direct	Torsion	Total
AEI	157.1 E	39.9 W	117.2 E
BFJ	121.6 E	3.2 W	118.4 E
CG	54.7 E	11.0 E	65.7 E
DH	74.6 E	32.1 E	106.7 E
ABCD	0	26.4 S	26.4 S
EFGH	0	10.7 N	10.7 N
IJ	0	15.7 N	15.7 N

From these loads the shears, moments, and direct stresses in the members of the bents may be calculated, and if necessary the members reproportioned.

68. Floor Distortion. Using the member sizes shown on Fig. 98, the unit stresses from *column direct stress* due to the wind from the west are calculated in the following table.

Column	E–W Comp. D (kips)	N–S Comp. D (kips)	Total Direct (kips)	Area sq in.	Unit Stress kips per sq in.
A	395.2(*t*)	60.0(*t*)	455.2(*t*)	62.07	7.35(*t*)
B	409.2(*t*)	0	409.2(*t*)	88.20	4.64(*t*)
C	447.9(*t*)	0	447.9(*t*)	88.20	5.08(*t*)
D	725.4(*t*)	60.0(*c*)	665.4(*t*)	62.07	10.73(*t*)
E	0	24.3(*c*)	24.3(*c*)	88.20	0.27(*c*)
F	0	0	0	125.25	0
G	447.9(*c*)	0	447.9(*c*)	88.20	5.08(*c*)
H	725.4(*c*)	24.3(*t*)	701.1(*c*)	62.07	11.30(*c*)
I	395.2(*c*)	107.0(*c*)	502.2(*c*)	62.07	8.09(*c*)
J	409.2(*c*)	107.0(*t*)	302.2(*c*)	62.07	4.87(*c*)

The direct column unit stresses given in the table above are shown plotted on the isometric floor plan in Fig. 99. The departure of the floor from a plane surface is clearly indicated. The warpage is

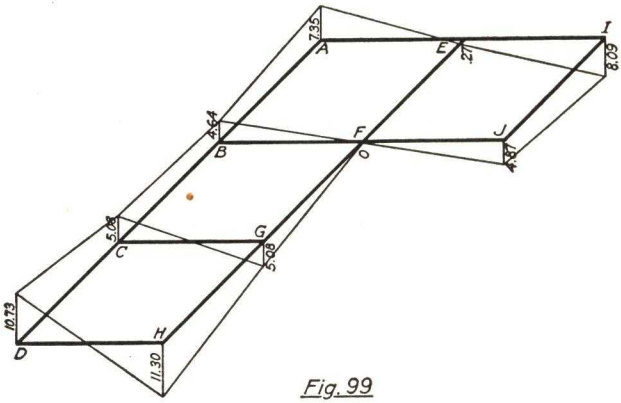

Fig. 99

especially pronounced in the longer wing. Corrections for the secondary stresses in the girders due to warping may be made by trial.

In designing buildings of symmetrical floor plan, it is feasible to proportion the girder system for stiffness as well as for strength, as in the Spurr method (Art. 61) so that, when the columns lengthen and shorten under wind, the floors will remain plane. If, on the other hand, the structure has not been proportioned for planar performance,

it will be found that a warpage of the floors occurs and accumulates from the base of the structure upward, causing secondary stresses in the girders which have a maximum value approximately half way up the structure.*

It is possible to design an unsymmetrical building, predicated upon the floors remaining plane, but the process becomes quite complicated; and, if the dissymmetry is pronounced, such a design may be far from economical. If the structure is unsymmetrical about both axes it is doubtful if floor planarity could be maintained for both east-west and north-south winds.

* "Settlement Stresses in Continuous Structures," by George E. Large, *Bulletin* 103, Engineering Experiment Station, Ohio State University.

CHAPTER IX

RADIO AND TRANSMISSION TOWERS

69. General Discussion. Radio towers, transmission towers, oil well derricks, and similar structures are in a class apart from those which have been previously considered. The failure or partial crippling of such a structure usually will not entail loss of life or great property damage. Consequently a lower factor of safety usually is justified.

In an *oil well derrick,* the stresses induced by the drilling operations or by pulling the casings are not expected to occur at the same time as the maximum stresses due to wind. On the other hand, the maximum stresses in *transmission towers* are due to wind on both the towers and the transmission lines connected to them. In free standing *radio towers* the dead load and wind stresses are the major stresses. In *guyed towers* the variations in tension in the guys and wind on the guys also must be taken into account.

Towers of these types usually have bolted field connections which cannot be depended upon to give full continuity through the joints; but the type of bracing is usually such as to give a simple path for transmission of the loads to the foundation without involving flexure in the members.

70. Wind Pressures on Open Frameworks. From the discussion given in Chapter I, Art. 6, it would appear that open framed towers should be designed for somewhat higher unit wind loads than solid walled buildings. Experiments on models of various structures, carried on in the wind tunnel at the U. S. Bureau of Standards,* indicate that the resultant unit pressure of the wind on open frameworks is about 25% greater than the unit pressure on a rectangular prism (a building). In calculating the surface exposed to the wind, no credit should be given for the shielding of the leeward portions of the tower by the windward frames. The recommended unit pressures given in Art. 6 then should be increased for towers to a uniformly distributed force of 25 lb per sq ft for the first 300 ft above the ground and increased above this level by 3 lb per sq ft for each additional 100 ft of height ($1.25 \times 2.5 = 3.125$).

* "Wind Pressures on Structures," by Hugh L. Dryden and George C. Hill, *Scientific Paper* 523 of the U. S. Bureau of Standards.

71. Free Standing Radio Towers. Free standing radio towers are usually tapered in order to furnish anchorage to the foundation without excessive uplift. They may be either square or triangular in cross section. Usually the only vertical loads they have to carry are their own weight, the weight of the " umbrella " or other form of antenna at the top, and an ice load due to sleet. See Art. 3.

Before starting the wind analysis an estimate must be made of the approximate areas of members exposed to wind action. The panel concentrations will vary from the top down, not only because of the taper of the tower but also because of the changing panel heights and the member sizes. The stress analysis usually is made graphically on the assumption that, where two diagonals intersect in a panel, the entire stress is taken by the tension diagonal.

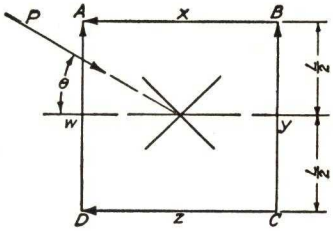

Fig. 100

The stresses in the members are governed by the direction of the wind. Figure 100 shows a cross section of a square tower with the direction of the wind indicated by the force P. This force P is resisted by the four planes of bracing, w, x, y, and z. It is assumed that the tower is symmetrical about both axes. Then the forces taken by the planes of bracing are

$$P_x = P_z = \tfrac{1}{2}P \cos \theta \qquad [1]$$

and

$$P_y = P_w = \tfrac{1}{2}P \sin \theta \qquad [2]$$

For maximum stresses in the bracing members of planes x and z, $\theta = 0$ and

$$P_x = P_z = \tfrac{1}{2}P \qquad [3]$$

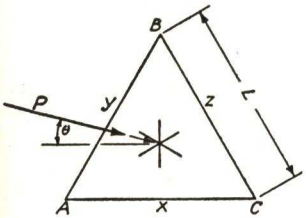

Fig. 101

The tower legs are each common to two planes of bracing and the maximum stresses in tower legs A and C will occur when $\theta = 45°$. Then

$$P_x = P_w = \tfrac{1}{2}P \cos \theta = 0.3535P \qquad [4]$$

If the cross section of the tower is an equilateral triangle, as shown in Fig. 101, the wind force P is resisted by the three planes of bracing, x, y, and z. By moments about B, the intersection of planes y and z,

$$0.866LP_x = \tfrac{2}{3} \times 0.866L \times P \cos \theta$$

$$P_x = \tfrac{2}{3}P \cos \theta \qquad [5]$$

The component taken by the plane x is a maximum when $\cos\theta$ is a maximum or, when $\theta = 0$,

$$P_x = \tfrac{2}{3}P \qquad [6]$$

This direction of the wind gives maximum stresses in the *bracing* of plane x.

By moments about A, the intersection of planes x and y,

$$0.866LP_z = \tfrac{2}{3}P \times 0.866L \sin(\theta + 30°)$$

$$P_z = \tfrac{2}{3}P \sin(\theta + 30°) \qquad [7]$$

Tower leg C is common to planes x and z, and will get its maximum stress when the sum of the loads on x and z is a maximum. Adding equations [5] and [7],

$$P_x + P_z = \tfrac{2}{3}P[\cos\theta + \sin(\theta + 30°)]$$

$$P_x + P_z = \tfrac{2}{3}P(1.5\cos\theta + 0.866\sin\theta) \qquad [8]$$

Differentiating and setting the first differential equal to zero,

$$\tfrac{2}{3}P(0.866\cos\theta - 1.5\sin\theta) = 0$$

$$\frac{\sin\theta}{\cos\theta} = \tan\theta = \frac{0.866}{1.5} = 0.577$$

$$\theta = 30° \qquad [9]$$

Therefore, for a maximum stress in tower leg C, the force P should act normal to the plane y, and, from equation [5],

$$P_x = P_z = \tfrac{2}{3}P\cos 30° = 0.577P \qquad [9a]$$

Figure 102 shows a free standing radio tower, 300 ft high, with the estimated wind forces indicated. These wind forces represent the total wind load on the tower. They will not vary greatly with the direction of the wind. In calculating the stresses, the forces are assumed to be applied, all at the windward side of the respective planes of bracing. Above the point F we have a simple system of triangular bracing, and the stresses are most easily calculated algebraically. From F to H there are two systems of triangular bracing, and it is assumed that the first, third, and fifth loads are carried by one system and the second, fourth, and sixth loads by the other. All diagonals above H must be designed to carry either tension or compression. Below H the diagonals are assumed to carry tension only except in the bottom panel.

72. Guyed Towers. High radio towers (over 250 ft) frequently consist of a square or triangular mast, supported on a single point at

the bottom and guyed at one or more levels. The stresses in the mast are affected by the elevations at which the guys are attached, the angle of the guys with the horizontal and the initial tension in the guys.

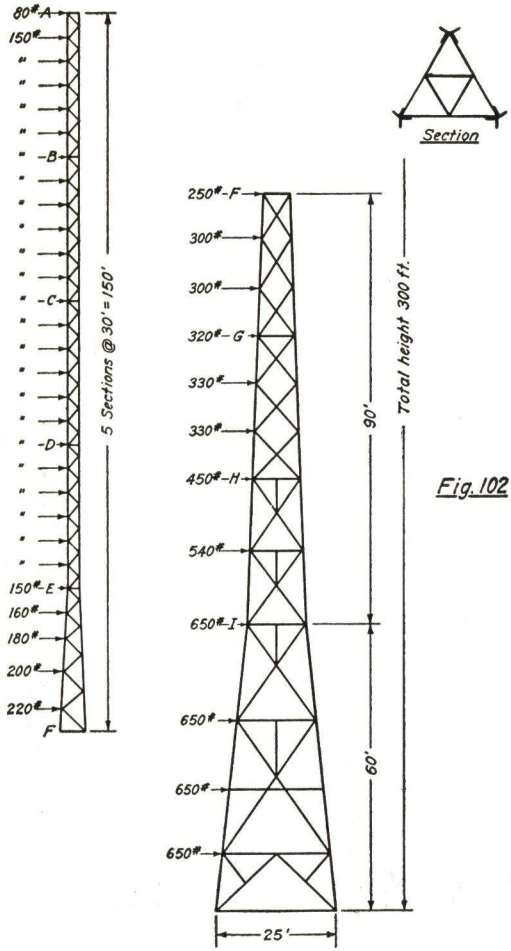

Fig. 102

The principal stresses in the mast are caused by the bending moments induced. Figure 103 shows a mast with only one set of guys. The wind load is assumed to be uniformly distributed vertically along the mast, and equal to p lb per linear ft.

In order that the bending moments in the mast may be a minimum, the guys should be attached at a height above the base equal to $1/\sqrt{2}$

times the total height of the mast. Because the dead load of the mast plus the vertical components of the stresses in the guys increase the fiber stresses in the mast below the level of the cable connections, it is economical to lower the cable connections to about two-thirds the height of the mast.

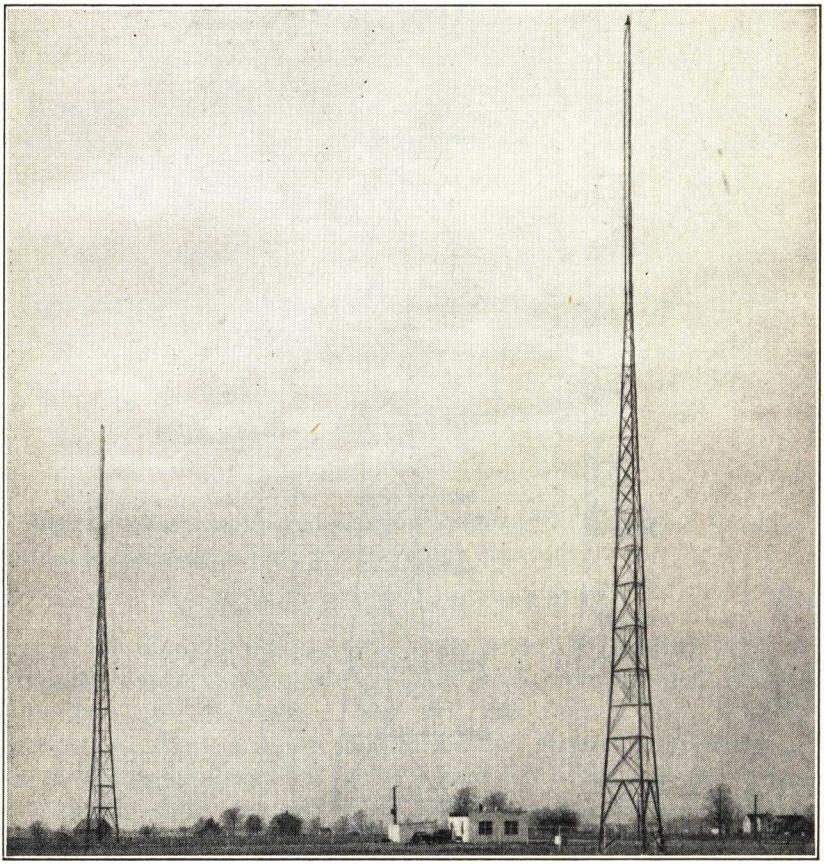

Free Standing Radio Towers. Station WGBF, Evansville, Ind. Height 262 feet. (Built by International Stacey Corp.)

When two sets of guys are used, as shown in Fig. 104, the mast becomes a continuous beam with three supports. The sizes of the guys and the initial tensions in them must be made such that the deflections of points A and D under wind will be approximately proportional to their heights above the base. In calculating the reactions

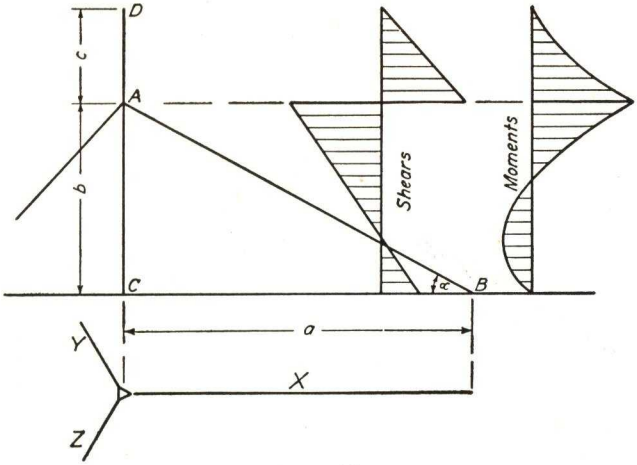

Fig. 103

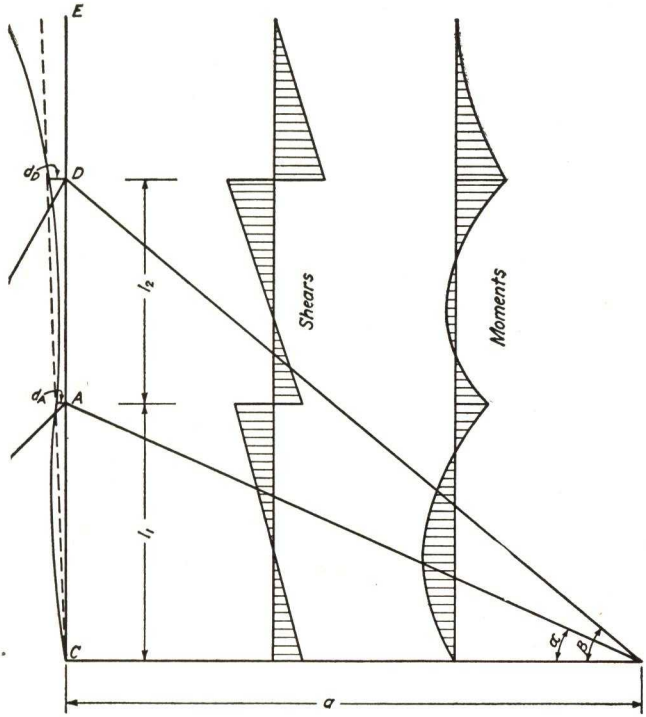

Fig. 104

it is sufficiently accurate to assume that the moment of inertia of the mast is constant. In order that the bending moments in the mast may be a minimum, the guys should be attached at elevations about

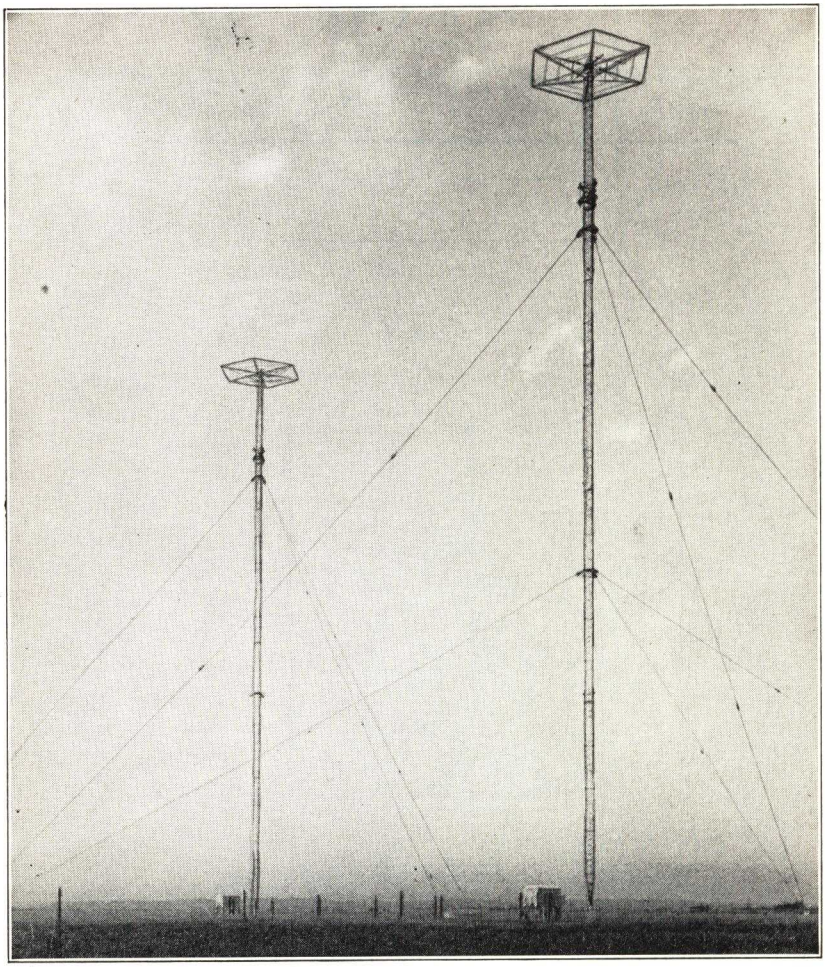

Guyed Towers. Station WWL, New Orleans, La. Height 395 feet.
(Built by International Stacey Corp.)

$^3/_{10}$ and $^8/_{10}$ of the height. However, when the vertical components of the guy stresses are taken into account, it is found that it is best to attach the guys at about one-third and three-fourths of the height.

73. Wind Direction for Maximum Stresses. In Fig. 105, let H_x, H_y, and H_z represent the horizontal components of the stresses in the three guys, and P represent the applied wind force. For the wind in the general direction shown, and neglecting for the time the initial stresses in the guys, the wind stress in guy Z will be zero. Resolving normal to guy Y,

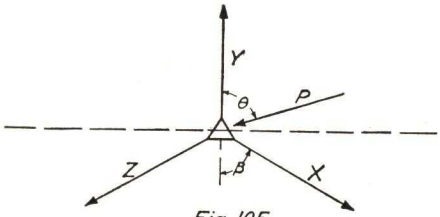

Fig. 105

$$H_x \sin \beta = P \sin \theta \qquad [10]$$

From this, H_x is a maximum when $\sin \theta$ is a maximum, or when $\theta = 90°$. For three guys equally spaced,

$$H_{x\ \max} = 1.155P$$

and the concurrent component $H_y = 0.577P$.

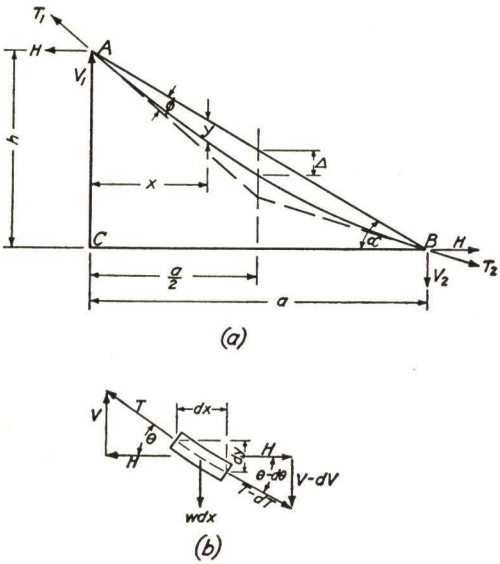

Fig. 106

74. Cable Sag and Deflections. It is customary to put an initial tension in the guys equal to about one-eighth of the breaking load and to use a working stress of one-fourth to one-third the breaking load.

The vertical and horizontal components of the tension in a guy depend upon its sag and the inclination of the tangents at its ends.

The weight of a guy will be small compared with the tension in it and, therefore, its deflection from a straight line will be small compared to its length. Because of these facts it will not be greatly in error to assume the weight as uniformly distributed along the horizontal projection; and the form of the curve, therefore, will be nearly a parabola. This assumption is sufficiently accurate for the calculation of stresses and deflections.

Figure 106(*b*) represents a differential length of the cable with the forces acting upon it.

w = the average weight per horizontal unit.

From $\sum$ vert. comp. = 0,

$$V - wdx - (V - dV) = 0 \quad \text{or} \quad \frac{dV}{dx} = w \qquad [11]$$

$$V = H \tan \theta = H \frac{dy}{dx}$$

Differentiating,

$$\frac{dV}{dx} = H \frac{d^2y}{dx^2} = w \qquad [12]$$

Transposing,

$$\frac{d^2y}{dx^2} = \frac{w}{H} \qquad [13]$$

Integrating twice,

$$\frac{dy}{dx} = \frac{wx}{H} + C_1 \qquad [14]$$

$$y = \frac{wx^2}{2H} + C_1x + C_2 \qquad [15]$$

With the origin of coordinates at A and measuring y vertically from AB,

$$\text{When } x = 0, \quad y = 0 \quad \text{Therefore } C_2 = 0$$

and

$$\text{When } x = a, \quad y = 0 \quad \text{And } C_1 = -\frac{wa}{2H}$$

Then the equation of the cable is

$$y = \frac{wx^2 - wax}{2H} \qquad [16]$$

Setting the first differential equal to zero in equation [14], we find that y is a maximum when $x = a/2$ and

$$\Delta = -\frac{wa^2}{8H} \qquad [17]$$

If we let T = the average tension in the cable
= the tension at the middle,

$$H = T \cos \alpha \qquad [18]$$

(The tangent at the middle is parallel to AB.)

The angle between the tangent at A or at B and the line AB may be obtained from equation [14].

When $x = 0$ (at A),

$$\frac{dy}{dx} = \tan \phi = \frac{wa}{2H} \qquad [19]$$

When $x = a$(at B),

$$\frac{dy}{dx} = \tan \phi = \frac{wa}{2H} \qquad [20]$$

$$V_1 = H \tan (\alpha + \phi) \qquad [21]$$

$$V_2 = H \tan (\alpha - \phi) \qquad [22]$$

In calculating the effect of initial stresses in the cables, upon the wind stresses, it will be necessary to determine the effect of horizontal deflection of the upper connection of the cable upon its sag. The length of the cable is given, approximately, by the formula

$$L = a\left[\sec \alpha + \frac{8\Delta^2}{3a^2 \sec^3 \alpha}\right] \qquad [23]^*$$

If there is a change in sag due to change in stress, the horizontal deflection of the upper cable connection may be found by transposing equation [23].

Let d = horizontal deflection of upper cable connection. Then

$$(a + d)^2 - L(a + d) \cos \alpha + \frac{8\Delta^2}{3 \sec^4 \alpha} = 0 \qquad [24]$$

The solution of this quadratic gives the desired horizontal movement. In this equation, the change in L due to change in stress should be estimated and included. It is sufficiently accurate to obtain Δ from equation [17], disregarding the deflection of A.

* See *Modern Framed Structures,* Part II, 10th Ed., p. 208, by Johnson, Bryan, and Turneaure.

To illustrate the method of calculation, an example will be given.

75. A Guyed Tower. Figure 103 shows a tower 300 ft high with a single set of guys attached at the 200-ft level.

$$a = 360 \text{ ft} \qquad b = 200 \text{ ft} \qquad c = 100 \text{ ft}$$

The estimated wind load on the mast is 30 lb per ft. Considering the wind as acting on two guys, the pressure on the guys will be about

$$2 \times 412 \times \tfrac{1}{12} \times 25 \text{ lb} = 1700 \text{ lb}$$

Half of this will be applied at A and half at the ground. By moments in Fig. 103, the reactions for the mast are

$$R_A = 6750 + 850 = 7600 \text{ lb}$$
$$R_C = 2250 \text{ lb}$$

From Fig. 105 and equation [10], the maximum horizontal component of wind stress in guy X is $H_x = 7600 \times 1.155 = 8780$ lb.

$$\text{The concurrent } H_y = 4390 \text{ lb}$$

These components are calculated on the assumption that there is no horizontal movement of A and, consequently, no change in the initial stresses in the guys. The point A, Fig. 103, will deflect, and, from Fig. 105, the initial stress in Z will be relieved somewhat, which will relieve an equal part of the initial tension in each of the other guys. The amount of this relief must be determined by trial.

Disregarding the initial tensions for the moment, the maximum wind stress in guy X will be

$$X_w = 8780 \sec \alpha = 10{,}040 \text{ lb}$$

Try ⅞-in. high-strength cable, breaking load = 66,000 lb. The initial tension will be about 8400 lb. Horizontal component of initial tension = 8400 cos α = 7340 lb.

$$\begin{aligned} \text{Weight of cable} &= 1.20 \times 412 = 490 \\ \text{4 insulators at } 57\tfrac{1}{2} \text{ lb} &= \underline{230} \\ \text{Total} &= 720 \text{ lb} \end{aligned}$$

The weight of the insulators has been assumed as being uniformly distributed along the cable. If the insulators are all concentrated near the top of the cable the sag will be somewhat reduced and the true shape of the cable may be determined by a force polygon. This is usually an unnecessary refinement.

$$\text{Load per horizontal foot} = \frac{720}{360} = 2.00 \text{ lb}$$

From equation [17],

$$\Delta = \frac{2.00(360)^2}{8 \times 7340} = 4.41 \text{ ft for dead load alone}$$

From equation [23],

$$L = 360\left[1.144 + \frac{8(4.41)^2}{3(360)^2 \sec^3 \alpha}\right] = 411.93 \text{ ft}$$

$$\text{Net area of cross section for a } \tfrac{7}{8}\text{-in. cable} = \frac{\text{Weight per ft}}{\text{Wt of 1 sq in. steel per ft}}$$
$$= 0.353 \text{ sq in.}$$

Assumed modulus of elasticity of cable = 20,000,000 psi

Guess at relief of initial tension in cable Z due to horizontal deflection of point A, say 5540 lb. Its horizontal component = 4840 lb.

$$\text{Estimated } H_z = 7340 - 4840 = 2500 \text{ lb}$$
$$\text{Concurrent } H_y = 4390 + 2500 = 6890 \text{ "}$$
$$\text{Concurrent } H_x = 8780 + 2500 = 11{,}280 \text{ "}$$

The approximate total stresses in the guys when X is a maximum are

$$Z = 2500 \sec \alpha = 2860 \text{ lb}$$
$$Y = 6890 \sec \alpha = 7880 \text{ "}$$
$$X = 11{,}280 \sec \alpha = 12{,}900 \text{ "}$$

$$\text{The wind stress in } Z = 2860 - 8400 = -5540 \text{ lb}$$
$$\text{The wind stress in } Y = 7880 - 2860 = 5020 \text{ "}$$
$$\text{The wind stress in } X = 12{,}900 - 2860 = 10{,}040 \text{ "}$$

$$\text{Unit wind stress in } X = \frac{10{,}040}{0.353} = 28{,}440 \text{ psi}$$

$$\text{Unit wind stress in } Y = \frac{5020}{0.353} = 14{,}220 \text{ "}$$

$$\text{Unit wind stress in } Z = \frac{-5540}{0.353} = -15{,}690 \text{ "}$$

$$\text{The stretch of cable } X \text{ due to wind} = \frac{28{,}440}{20{,}000{,}000} \times 411.93 = 0.586 \text{ ft}$$

$$\text{The stretch of cable } Y \text{ due to wind} = \frac{14{,}220}{20{,}000{,}000} \times 411.93 = 0.293 \text{ "}$$

$$\text{The stretch of cable } Z \text{ due to wind} = \frac{-15{,}690}{20{,}000{,}000} \times 411.93 = -0.323 \text{ "}$$

From equation [17], the sags of the cables will be

$$\Delta_x = \frac{wa^2}{8H} = \frac{2.00(360)^2}{8 \times 11{,}280} = 2.87 \text{ ft}$$

$$\Delta_y = \frac{2.00(360)^2}{9 \times 6890} = 4.70 \text{ ft}$$

The total lengths of the guys under wind stress, when X is a maximum, are

$$\text{Length } X = 411.93 + 0.586 = 412.516 \text{ ft}$$
$$\text{Length } Y = 411.93 + 0.293 = 412.223 \text{ ft}$$
$$\text{Length } Z = 411.93 - 0.323 = 411.607 \text{ ft}$$

From equation [24],

$$\text{For guy } X, \quad (a + d_x)^2 - 412.516 \cos \alpha \, (a + d_x) + \frac{8(2.87)^2}{3 \sec^4 \alpha} = 0$$

$$a + d_x = 360.556 \text{ ft}$$
$$d_x = 0.556 \text{ ft}$$

$$\text{For guy } Y, \ (a + d_y) = 360.238 \text{ ft}$$
$$d_y = 0.238 \text{ ft}$$

By geometry, as shown in Fig. 107,

$$d_z = d_x + d_y = -0.794 \text{ ft}$$

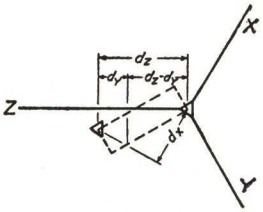

Fig. 107

From equation [24],

$$\Delta^2 = \frac{3 \sec^4 \alpha}{8} (a + d)[L \cos \alpha - (a + d)]$$

$$\Delta_z^2 = \frac{5.1381}{8} \times 359.206[359.796 - 359.206]$$

$$\Delta_z^2 = 136.12 \qquad \Delta_z = 11.67 \text{ ft}$$

From equation [17],

$$H_z = \frac{wa^2}{8\Delta_z} = \frac{2.0(359.206)^2}{8 \times 11.67} = 2760 \text{ lb}$$

This value of H_z compares with the first estimated value, which was 2500 lb. If a closer approximation is desired, a second set of calculations may be carried through.

Using the new value of H_z, the horizontal component of the wind stress carried by relief of initial tension is

$$7340 - 2760 = 4580 \text{ lb}$$

The resulting maximum stress in guy X is found by adding the wind stress to the residual initial tension.

$$H_x = 8780 + 2760 = 11{,}540 \text{ lb}$$

From equation [20],

$$\tan \phi = \frac{2.00 \times 360}{2 \times 11{,}540} = 0.0312$$

$$\phi = 1° - 47'$$

$$\alpha = 29° - 3'$$

$$\text{Max } X = H_x \sec (\alpha + \phi) = 13{,}440 \text{ lb}$$

The breaking load for a ⅞-in. high-strength cable is about 66,000 lb. A working load of one-fourth the breaking load would give 16,500 lb allowable.

Ice Load. It is assumed that ice load on the cables will not occur at the same time as the maximum wind load, because the vibrations of the cables due to wind would loosen the ice.

From equation [17],

$$H = \frac{wa^2}{8\Delta}$$

The value of Δ for dead load alone is 4.41 ft. The stretch of the cable due to added ice load will increase its sag. The exact amount may be obtained by approximations.

The ice load,* according to Art. 3, would be about 2.5 lb per ft of cable or 2.9 lb per ft horizontal. The total load $w = 2.9 + 2.0 = 4.9$ lb per ft. Using the ice load alone and the dead load sag of 4.41 ft, $H_I = 9{,}200$ lb and $T_I = 10{,}500$ lb. The stretch due to this added tension is

$$\frac{10{,}500 \times 411.93}{0.353 \times 20{,}000{,}000} = 0.613 \text{ ft}$$

The length of the cable then would be

$$L = 411.93 + 0.613 = 412.543 \text{ ft}$$

Substituting in equation [23] and solving for Δ,

$$\Delta^2 = 142 \quad \text{and} \quad \Delta = 11.91 \text{ ft}$$

Obviously, the sag of the cables will be increased considerably by the ice load.

* Ice loads as high as 7 lb per ft of power line have been reported.

Guessing at a value of the total sag of, say, 8 ft, from equation [17],

$$H_I = \frac{2.9 \times (360)^2}{8 \times 8.0} = 5870 \text{ lb} \quad \text{and} \quad T_I = 6700 \text{ lb}$$

The stretch due to this added tension is

$$\frac{6700 \times 411.93}{0.353 \times 20{,}000{,}000} = 0.391 \text{ ft}$$

The length of the cable then would be

$$L = 411.93 + 0.391 = 412.321 \text{ ft}$$

Using $\Delta = 8.0$ ft, from equation [23],

$$L = 412.156 \text{ ft}$$

This indicates that the sag would exceed 8.0 ft. By trial it is found that $\Delta = 9.3$ ft satisfies the equations. For this sag

$$\text{Total } H = \frac{4.9(360)^2}{8 \times 9.3} = 8535 \text{ lb}$$

From equation [20],

$$\tan \phi = \frac{4.9 \times 360}{2 \times 8535} = 0.1033$$

$$\begin{aligned} \phi &= 5^\circ - 56' \\ \alpha &= 29^\circ - 03' \\ (\alpha + \phi) &= 34^\circ - 59' \end{aligned}$$

$$\text{Max } T = H \sec (\alpha + \phi) = 10{,}420 \text{ lb}$$

which is well within the safe load for a ⅞-in. cable.

76. Stresses in the Mast. Since the weight of the mast causes a small proportion of the total maximum stress which it must carry, it is sufficiently accurate to assume its weight as uniformly distributed vertically. In the problem of Art. 75 this will be assumed as 64 lb per ft.

The mast is triangular in cross section and braced as shown in Fig. 108. It is built in 20-ft sections as shown. The members are made of solid round sections. The system of lacing shown gives a positive support to each vertical in two directions at each panel point. The specifications of the American Institute of Steel Construction for the Design of Structural Steel for Buildings will be followed. The shear and moment diagrams, due to wind, are shown in Fig. 103.

The lateral dimension of the mast must be such that the maximum

value of L/r will not exceed 120. The maximum unsupported length is 200 ft, and the required radius of gyration is 1.667 ft. The radius of gyration of a triangular section is 0.408 times the side of the triangle and the required lateral dimension is $\frac{1.667}{0.408} = 4$ ft.

Mast above A, Fig. 103. The mast above A is a free standing cantilever, and the maximum moment at A due to wind is

$$M_A = \frac{30 \times (100)^2}{2} = 150{,}000 \text{ ft-lb}$$

The maximum compression in vertical C will occur with the wind normal to AB. (See Fig. 101, and equation [9].) The effective depth of the mast is 3.46 ft, and the maximum compression in vertical C due to wind is

$$V_c = \frac{150{,}000}{3.46} = 43{,}400 \text{ lb}$$

The dead load compression is

$$\tfrac{1}{3} \times 64 \times 100 = 2130 \text{ lb}$$

$$\text{Total } V_c = 43{,}400 + 2130 = 45{,}530 \text{ lb}$$

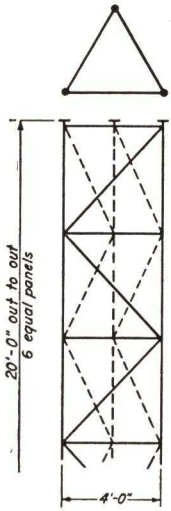

Fig. 108

Try $1\frac{7}{8}$-in. round. $\quad A = 2.76$ sq in. $\quad \frac{L}{r} = \frac{40}{0.47} = 85$

$$\text{Allowed unit stress} = 1\tfrac{1}{3} \times 13{,}500 = 18{,}000 \text{ psi}$$

$$\text{Reqd. area} = \frac{45{,}530}{18{,}000} = 2.53 \text{ sq in.}$$

The sizes of the vertical members may be reduced toward the top of the mast, but in no case should the value of L/r exceed 120. The stresses in the web members are readily obtained from the shears. The maximum shears on a single plane of bracing are obtained when $\theta = 0$ in Fig. 101. (See equation [6].) These will be two-thirds of the amounts shown in the shear diagram of Fig. 103.

Mast below A, Fig. 103. The stresses in the mast below the connections of the guys are affected by the vertical components of the stresses in the guys. The maximum stress in a guy and the maximum compression in the vertical to which it is attached do not occur under the same wind direction. (Compare Figs. 101 and 105.)

From Art. 75, the initial tension in a guy (no wind) is 8400 lb. Its vertical component plus half the weight of the guy will be

$$V_c = 8400 \sin \alpha + \frac{720}{2} = 4{,}440 \text{ lb}$$

$$\text{Dead load at } A \text{ (Fig. 106)} = 2{,}130 \text{ "}$$

$$\text{Total } V_c = 6{,}570 \text{ "}$$

When the wind direction is normal to AB, Fig. 101, the wind stress due to bending will be a maximum for vertical C. When the wind is normal to face AB, the tension in guy Z, which is attached to the mast at C, Fig. 101, will be slightly less than the amount calculated in the last article because of the change in direction of the wind; but it will be on the safe side to use the stress formerly computed in calculating the stress in vertical C.

$$\text{From wind, } V_c = 43{,}400(c)$$

$$\text{From dead load} = 2{,}130(c)$$

$$\text{From guy tension} = 2760 \tan (\alpha + \phi) = 1{,}650(c) \quad \text{(See Art. 75.)}$$

$$\text{Max compression just below } A = 47{,}180 \text{ lb}$$

When the wind is normal to face AB, the horizontal components of the wind stresses in guys X and Y are equal, and each is

$$\frac{7600}{2} \times \sec 60° = 7600 \text{ lb}$$

$$H_x = H_y = 7600 + 2760 = 10{,}360 \text{ lb}$$

The simultaneous stress in vertical A or B is

$$\text{From wind, } V_A = \frac{43{,}400}{2} = 21{,}700(t)$$

$$\text{From dead load} = 2{,}130(c)$$

$$\text{From guy tension} = 10{,}360 \tan (\alpha + \phi) = 6{,}200(c)$$

$$\text{Max tension just below } A = 13{,}370 \text{ lb}(t)$$

From the shear diagram, Fig. 103, the maximum positive moment occurs 75 ft above the base, and is $\frac{30 \times (75)^2}{2} = 84{,}400$ ft-lb. For maximum compression in C, here, the wind direction will be opposite to that for compression in C at the connection of the guys.

$$\text{From wind, } V_c = \frac{84{,}400}{3.46} = 24{,}400 \text{ lb}$$

$$\text{From dead load, } V_c = \tfrac{1}{3} \times 64 \times 225 = 4{,}800 \text{ "}$$

$$\text{From guy tension, } V_c = 10{,}360 \tan(\alpha + \phi) = 6{,}200 \text{ "} \quad \text{(See Art. 75.)}$$

$$35{,}400 \text{ "}$$

The maximum compression in vertical C is, therefore 47, 180 lb. The allowed compressive unit stress is 18,000 lb per sq in., as noted for the member above A. Reqd. area $= \dfrac{47{,}180}{18{,}000} = 2.62$ sq in. This requires a $1\frac{7}{8}$-in. round.

The mast, as a whole, must be considered as a column from A to C, Fig. 103. Its radius of gyration will be

$$r = 0.408 \times 4.0 = 1.63 \text{ ft}$$

$$\frac{L}{r} = \frac{200}{1.63} = 123 \qquad \text{Allowed unit stress} = 1\tfrac{1}{3} \times 9677 \text{ psi}$$

$$\text{Total compression in the mast} = 6200 \times 2 + 1650 + 3 \times 2130$$
$$= 20{,}440 \text{ lb at } A$$

$$\text{From direct compression, } s = \frac{20{,}440}{3A} = \frac{6810}{A}$$

$$\text{From bending, } s = \frac{43{,}400}{A} = \frac{43{,}400}{A}$$

$$\text{Max } s = \frac{50{,}210}{A}$$

in which A = area of one vertical.

Quoting from the specifications,

> Members subject to both axial and bending stresses shall be so proportioned that the quantity $f_a/F_a + f_b/F_b$ shall not exceed unity, in which
>
> F_a = axial unit stress that would be permitted if axial stress alone existed,
>
> F_b = bending unit stress that would be permitted if bending stress only existed,
>
> f_a = actual axial unit stress,
>
> f_b = actual bending unit stress.

$$\frac{\dfrac{6810}{A}}{1\tfrac{1}{3} \times 9677} + \frac{\dfrac{43{,}400}{A}}{1\tfrac{1}{3} \times 20{,}000} = 1.0$$

Solving for A,

$$A = 0.53 + 1.63 = 2.16 \text{ sq in.}$$

The minimum permissible area of one vertical below A, Fig. 103, is 2.16 sq in. This requires a 1¾-in. round. Although the 1¾-in. round is sufficient, considering the mast as a whole, a 1⅞-in. round is necessary when the individual vertical member is considered.

77. Towers Guyed at Two Levels. Figure 104 shows a mast 400 ft high, with two sets of guys anchored 360 ft from the base. The reactions at the three levels, C, A, and D, may be determined with sufficient accuracy by assuming the moment of inertia of the mast to be constant. It also is assumed that the sizes and initial tensions in the guys are so adjusted that the deflections at A and D, due to wind, are proportional to their heights above the base.

$$a = 360 \text{ ft} \quad l_1 = 140 \text{ ft} \quad l_2 = 160 \text{ ft}$$

From the theorem of three moments, the horizontal reactions are found to be

$$R_C = 59.17p \quad R_A = 139.06p \quad R_D = 201.77p$$

From these the shear and moment diagrams may be drawn as shown in Fig. 104. As in the problem of Art. 75, the estimated wind load on the mast is 30 lb per ft. The wind pressure on the guys will be about

$$\tfrac{1}{2} \times 2 \times 387 \times \tfrac{1}{12} \times 25 = 810 \text{ lb applied at } A$$
$$\tfrac{1}{2} \times 2 \times 469 \times \tfrac{1}{12} \times 25 = 980 \text{ lb applied at } D$$

The total horizontal reactions for the mast are

$$R_C = 59.17 \times 30 = 1775 \text{ lb}$$
$$R_A = 139.06 \times 30 + 810 = 4980 \text{ lb}$$
$$R_D = 201.77 \times 30 + 980 = 10{,}030 \text{ lb}$$

From equation [10], the maximum horizontal component of wind stress in guy X_A is

$$H_{XA} = 4980 \times 1.155 = 5750 \text{ lb}$$
$$\text{The concurrent } H_{YA} = 2875 \text{ lb}$$
$$H_{XD} = 10{,}030 \times 1.155 = 11{,}580 \text{ lb}$$
$$\text{The concurrent } H_{YD} = 5790 \text{ lb}$$

These components are calculated on the assumption that there is no horizontal movement of the points A and D, and consequently no change in the initial tensions in the guys. The points A and D will deflect, and, from Fig. 105, the initial stresses in Z_A and Z_D will be relieved somewhat, which will relieve an equal part of the initial stresses in each of the other guys attached at the same level. The amount of this relief must be determined by trial.

Disregarding the initial tensions for the moment, the maximum wind stress in the guys will be

$$X_A = 5750 \sec \alpha = 6170 \text{ lb}$$
$$X_D = 11{,}580 \sec \beta = 15{,}080 \text{ "}$$

Try for guys at A, ¾-in. high-strength cable, breaking load = 50,000 lb. Try for guys at D, 1-in. high-strength cable, breaking load = 84,000 lb. For the ¾-in. cable at A we will try an initial tension of 6,200 lb, and for the 1-in. cable at D, an initial tension of 10,000 lb.

The respective horizontal components will be

$$H_{AI} = 5800 \text{ lb} \quad \text{and} \quad H_{DI} = 7700 \text{ lb}$$

$$\begin{aligned} \text{Weight of ¾-in. cable} &= 0.9 \times 387 = 350 \text{ lb} \\ \text{Four insulators at 56 lb} &= 225 \text{ "} \\ \text{Total} &= 575 \text{ "} \end{aligned}$$

$$\begin{aligned} \text{Weight of 1-in. cable} &= 1.58 \times 469 = 740 \text{ lb} \\ \text{Four insulators at 75 lb} &= 300 \text{ "} \\ \text{Total} &= 1040 \text{ "} \end{aligned}$$

$$\text{The weight per horizontal foot, } w_A = \frac{575}{360} = 1.6 \text{ lb per ft}$$

$$w_D = \frac{1040}{360} = 2.9 \text{ " " "}$$

From equation [17], for dead load alone,

$$\Delta_A = \frac{1.6(360)^2}{8 \times 5800} = 4.47 \text{ ft}$$

$$\Delta_D = \frac{2.9(360)^2}{8 \times 7700} = 6.10 \text{ ft}$$

From equation [23],

$$L_A = 360\left[\sec \alpha + \frac{8(4.47)^2}{3(360)^2 \sec^3 \alpha}\right] = 386.38 \text{ ft}$$

$$L_D = 360\left[\sec \beta + \frac{8(6.10)^2}{3(360)^2 \sec^3 \beta}\right] = 468.737 \text{ ft}$$

$$\text{Net area of cross section ¾-in. cable} = \frac{0.9}{3.4} = 0.257 \text{ sq in.}$$

$$\text{Net area of cross section 1-in. cable} = \frac{1.58}{3.4} = 0.465 \text{ " "}$$

Assumed modulus of elasticity = 20,000,000 lb per sq in.

Guess at relief of initial tension due to horizontal deflection of A, say 3600 lb, and due to horizontal deflection of D, say 6500 lb. The horizontal components of these are 3400 lb and 5000 lb, respectively.

$$\begin{aligned}
\text{Estimated } H_{ZA} &= 5800 - 3400 = 2400 \text{ lb} \\
\text{Concurrent } H_{YA} &= 2875 + 2400 = 5275 \text{ "} \\
\text{Concurrent } H_{XA} &= 5750 + 2400 = 8150 \text{ "} \\
\text{Estimated } H_{ZD} &= 7700 - 5000 = 2700 \text{ lb} \\
\text{Concurrent } H_{YD} &= 5790 + 2700 = 8490 \text{ "} \\
\text{Concurrent } H_{XD} &= 11{,}580 + 2700 = 14{,}280 \text{ "}
\end{aligned}$$

The approximate total stresses in the guys when X is a maximum are

$$\begin{aligned}
Z_A &= 2400 \sec \alpha = 2580 \text{ lb} \\
Y_A &= 5275 \sec \alpha = 5660 \text{ "} \\
X_A &= 8150 \sec \alpha = 8750 \text{ "} \\
Z_D &= 2700 \sec \beta = 3520 \text{ lb} \\
Y_D &= 8490 \sec \beta = 11{,}060 \text{ "} \\
X_D &= 14{,}280 \sec \beta = 18{,}600 \text{ "}
\end{aligned}$$

$$\begin{aligned}
\text{Wind stress in } Z_A &= 2580 - 6200 = -3620 \text{ lb} \\
\text{Wind stress in } Y_A &= 5660 - 2580 = 3080 \text{ "} \\
\text{Wind stress in } X_A &= 8750 - 2580 = 6170 \text{ "} \\
\text{Wind stress in } Z_D &= 3520 - 10{,}000 = -6480 \text{ lb} \\
\text{Wind stress in } Y_D &= 11{,}060 - 3520 = 7540 \text{ "} \\
\text{Wind stress in } X_D &= 18{,}600 - 3520 = 15{,}080 \text{ "}
\end{aligned}$$

$$\text{Unit wind stress } X_A = \frac{6170}{0.257} = 24{,}000 \text{ psi}$$

$$\text{Unit wind stress } Y_A = \frac{3080}{0.257} = 12{,}000 \text{ "}$$

$$\text{Unit wind stress } Z_A = \frac{-3620}{0.257} = -14{,}080 \text{ "}$$

$$\text{Unit wind stress } X_D = \frac{15{,}080}{0.465} = 32{,}400 \text{ psi}$$

$$\text{Unit wind stress } Y_D = \frac{7540}{0.465} = 16{,}200 \text{ "}$$

$$\text{Unit wind stress } Z_D = \frac{-6480}{0.465} = -13{,}900 \text{ "}$$

$$\text{Stretch of cable due to wind, } dL_{XA} = \frac{24.0 \times 386.38}{20{,}000} = 0.442 \text{ ft}$$

$$\text{Stretch of cable due to wind, } dL_{YA} = \frac{12.0 \times 386.38}{20{,}000} = 0.221 \text{ "}$$

$$\text{Stretch of cable due to wind, } dL_{ZA} = \frac{-14.08 \times 386.38}{20{,}000} = -0.272 \text{ "}$$

$$\text{Stretch of cable due to wind, } dL_{XD} = \frac{32.4 \times 468.73}{20{,}000} = 0.759 \text{ ft}$$

$$\text{Stretch of cable due to wind, } dL_{YD} = \frac{16.2 \times 468.73}{20{,}000} = 0.380 \text{ "}$$

$$\text{Stretch of cable due to wind, } dL_{ZD} = \frac{-13.9 \times 468.73}{20{,}000} = -0.326 \text{ "}$$

From equation [17] the sags of the cables will be

$$\Delta_{XA} = \frac{wa^2}{8H} = \frac{1.6(360)^2}{8 \times 8150} = 3.18 \text{ ft}$$

$$\Delta_{YA} = \frac{1.6(360)^2}{8 \times 5275} = 4.92 \text{ "}$$

$$\Delta_{XD} = \frac{2.9(360)^2}{8 \times 14{,}280} = 3.28 \text{ "}$$

$$\Delta_{YD} = \frac{2.9(360)^2}{8 \times 8490} = 5.53 \text{ "}$$

The total lengths of the guys under wind stress, when X is a maximum are

$$\text{Length } X_A = 386.38 + 0.442 = 386.822 \text{ ft}$$
$$\text{Length } Y_A = 386.38 + 0.221 = 386.601 \text{ "}$$
$$\text{Length } Z_A = 386.38 - 0.272 = 386.108 \text{ "}$$

$$\text{Length } X_D = 468.737 + 0.759 = 469.496 \text{ ft}$$
$$\text{Length } Y_D = 468.737 + 0.380 = 469.117 \text{ "}$$
$$\text{Length } Z_D = 468.737 - 0.326 = 468.411 \text{ "}$$

From equation [24],

$$\text{For guy } X_A, \quad (a + d)^2 - 386.822 \cos \alpha \, (a + d) + \frac{8 \times (3.18)^2}{3 \sec^4 \alpha} = 0$$

For guy X_A, $(a + d) = 360.448$ and $d_{XA} = 0.448$ ft
For guy Y_A, $(a + d) = 360.197$ and $d_{YA} = 0.197$ "
For guy X_D, $(a + d) = 360.651$ and $d_{XD} = 0.651$ "
For guy Y_D, $(a + d) = 360.309$ and $d_{YD} = 0.309$ "

From geometry, as shown in Fig. 107,

$$d_{ZA} = d_{XA} + d_{YA} = 0.645 \text{ ft}$$

From equation [24],

$$\Delta^2 = \frac{3 \sec^4 \alpha}{8} (a + d)[L \cos \alpha - (a + d)]$$

$$\Delta_{ZA}^2 = \frac{3.9765}{8} \times 359.355(386.108 \cos \alpha - 359.355) = 90.20$$

$$\Delta_{ZA} = 9.50 \text{ ft}$$

$$H_{ZA} = \frac{wa^2}{8\Delta_{ZA}} = \frac{1.6(360)^2}{8 \times 9.50} = 2730 \text{ lb}$$

This value of H_{ZA} compares with the first estimated value, which was 2400 lb.

$$d_{ZD} = d_{XD} + d_{YD} = 0.960 \text{ ft}$$

From equation [24],

$$\Delta_{ZD}^2 = \frac{8.613}{8} \times 359.040(468.411 \cos \beta - 359.040)$$

$$= 311.539 \qquad \Delta_{ZD} = 17.65 \text{ ft}$$

$$H_{ZD} = \frac{2.9(360)^2}{8 \times 17.65} = 2660 \text{ lb}$$

This value of H_{ZD} compares with the first estimated value, which was 2700 lb.

The original assumption that the horizontal deflections of A and D were proportional to their heights above the base would require that

$$d_{ZD} = \frac{300}{140} \times d_{ZA} = 1.382 \text{ ft}$$

The actual $d_{ZD} = 0.960$ ft. Therefore the mast is out of line at D by $1.382 - 0.960 = 0.422$ ft.

By integration of the elastic line of the mast it is found that

$$EI\delta = \frac{Pl_2^2}{3} (l_1 + l_2) \qquad [25]$$

in which δ = deflection of D with respect to CA produced,
P = the required horizontal force at D to produce δ.

Assuming in our case that the average size of the mast legs is 2 in. round

and that the mast is triangular, 3 ft on a side,

$$I = 4.5A = 4.5 \times \frac{3.1416}{144} = 0.0982 \text{ ft}^4$$

$$E = 29{,}000{,}000 \times 144 = 4176 \times (10)^6 \text{ lb per sq ft}$$

$$P = \frac{3EI\delta}{l_2^2(l_1 + l_2)} = 68 \text{ lb}$$

These calculations show that, in this case, the deviation of the mast from the assumed position does not affect the stresses in the guys appreciably. The small effect upon the bending moment is easily calculated.

The maximum stress in guy, $X_A = (5750 + 2730) \sec (\alpha + \phi)$

$$\tan \phi_A = \frac{1.6 \times 360}{2 \times 8480} = 0.03396 \quad \text{(equation [20])}$$

$$\begin{aligned} \phi_A &= 1^\circ - 57' \\ \alpha &= \underline{21 - 15} \\ (\alpha + \phi) &= 23^\circ - 12' \\ \text{Max } X_A &= 8480 \sec (\alpha + \phi) = 9220 \text{ lb} \end{aligned}$$

Breaking load for ¾-in. high-strength cable is about 50,000 lb.

The maximum stress in guy, $X_D = (11{,}580 + 2660) \sec (\beta + \phi)$

$$\tan \phi_D = \frac{2.9 \times 360}{2 \times 14{,}240} = 0.0366$$

$$\begin{aligned} \phi_D &= 2^\circ - 6' \\ \beta &= \underline{39 - 48} \\ (\beta + \phi) &= 41^\circ - 54' \\ \text{Max } X_D &= 14{,}240 \sec (\beta + \phi) = 19{,}130 \text{ lb} \end{aligned}$$

The breaking load for a 1-in. high-strength cable is about 84,000 lb.

78. Transmission Towers. The Cables. In the layout of tower structures for high voltage transmission lines it is advisable to have the cooperation of an electrical engineer, so that electrical requirements of the line may be properly taken care of in the design. The height of the towers must be such as to give ample clearance of the conductors, above the ground at the lowest point of the span, also clearance between the conductors and any communication lines or other distribution circuits which it may be necessary to carry on the main towers. Safety requirements at highway or railroad crossings must be met. Provisions for a grounded conductor to be carried from the topmost part of the tower must be made, its function being to protect the line from strokes of lightning. The number of suspension insulators

per string, to which the conductors are attached at each tower, must be determined from the operating voltage of the line.

The horizontal members of the upper part of the tower structure must be of such dimensions as to provide adequate clearance between the conductors, with allowance for side swing both of the conductors and of the string of insulators from which they are carried. Clearance between the individual conductors where they are attached to the insulators, and adjacent portions of the tower structure, must also be determined after due consideration of the electrical characteristics of the transmission line. At this point allowance must be made for arcing rings or horns, or other such devices needed to discharge lightning strokes, or voltage surges within the line which may result from certain load conditions. Provision must also be made for the devices used to protect the conductor and the lower insulators of the suspension string from the high potential gradients originating at the points where the conductor is attached. These gradients would cause brush discharges in the form of corona, resulting in appreciable power losses and rapid corrosion of all near-by metal parts. They would also subject the lower insulators of the suspension string to extreme potential strains which would cause them to deteriorate and make their frequent replacement necessary. These high potential gradients are relieved by the use of grading shields attached to the conductor where it is fastened to the insulators. The type and size of each of these protective devices must be ascertained, and proper clearance between them and the adjacent portions of the tower structure must be provided for in the design of the tower.

Transmission towers carrying cables may be subjected to stresses produced by variations in the initial tension in the cables, temperature changes, wind, ice, and by the breakage of one or more of the cables.

In order to study the effects of these conditions on the towers, an investigation first must be made of their effects upon the stresses in the cables themselves. The cables are usually suspended from the cross arms by chain insulators which are free to swing with the varying tension in the cable. These suspended insulators equalize the stresses in the adjacent cable spans and reduce the longitudinal forces which the towers have to resist. A flexible cable of uniform cross section suspended at two points and carrying only its own weight, or a uniform load along its length, assumes the form of a catenary. The equations of the catenary are cumbersome and not easily handled. *For relatively small sags,* which are usually met with in transmission lines, a parabolic curve gives results of sufficient accuracy. The error due to the parabolic assumption becomes greater as the sag increases.

For spans up to 1500 ft and sags not exceeding one-tenth ($\frac{1}{10}$) the span, the error will be less than 3%.

As in Art. 74, the weight of the cable is assumed to be uniformly distributed along its horizontal projection and its curve is, therefore, assumed to be a parabola, as shown in Fig. 109. Equations [16] to [23], inclusive, of Art. 74, apply to these transmission cables.

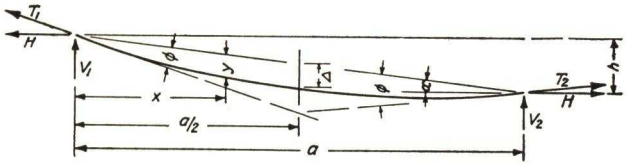

Fig. 109

The spacing of the towers and their height are governed by the allowable tension in the cable, the permissible sag, the required clearances, and the topography of the country. The sag is usually made as small as the allowable tension in the cable will permit.

To illustrate the sag calculations we will assume the following data (Fig. 109):

Span a = 800 ft. Difference in elevation h = 40 ft.

Steel-reinforced aluminum cable of 266,800 cir. mils.

Area = 0.2367 sq in. Max. allowed tension = 4730 lb.

E = 11,500,000 lb per sq in. Coefficient of thermal expansion = 0.00001.

Weight per foot of bare cable	= 0.341	lb
Ice load (1 in. radial)	= 1.009	"
Total vertical load	= 1.35	"

The wind load on a cylindrical surface is about one-half of that on a square prism of the same diameter; this would give a pressure of about 10 lb per sq ft on the ice-loaded cable $= \frac{2\frac{1}{2}}{12} \times 10 = 2.0$ lb per ft.

$$\text{Resultant} = \sqrt{(1.35)^2 + (2.0)^2} = 2.42 \text{ lb per ft}$$

For a first trial, assume H = 4600 lb. From equation [17],

$$\Delta = \frac{wa^2}{8H} = 42.1 \text{ ft}$$

$$\tan \alpha = 0.05 \qquad \alpha = 2° - 52'$$

From equation [20],

$$\tan \phi = \frac{wa}{2H} = 0.2104 \qquad \phi = 11° - 27'$$

$$(\alpha + \phi) = 14° - 19'$$

From equation [21],

$$V_1 = H \tan (\alpha + \phi) = 1175 \text{ lb.}$$

$$T_1 = \sqrt{(1175)^2 + (4600)^2} = 4750 \text{ lb}$$

This value is comparable with the maximum allowable tension of 4730 lb. The average tension in the cable $= H \sec \alpha = 4606$ lb.

The above sag and tension have been calculated at a minimum temperature of, say, zero Fahrenheit, under maximum wind and ice load. Under these conditions the length of the cable from equation [23] is

$$L = a\left[\sec \alpha + \frac{8\Delta^2}{3a^2 \sec^3 \alpha}\right] = 806.885 \text{ ft}$$

Suppose* now that the ice and wind are absent and the temperature rises to 120° Fahrenheit. The lengthening of the cable due to rise in temperature will be $120 \times 0.00001 \times 807 = 0.968$ ft. An approximate value of H may be determined by multiplying the former value by the load ratio.

$$\text{Trial } H = 4600 \times \frac{0.34}{2.42} = 646 \text{ lb}$$

Average tension in cable $= 646 \sec \alpha = 647$ lb

Approximate reduction in cable stress $= 4606 - 647 = 3959$ lb

$$\text{Approximate reduction in unit stress} = \frac{3959}{0.2367} = 16{,}720 \text{ psi}$$

$$\text{Approximate shortening of cable by relief of stress} = \frac{16{,}720 \times 807}{11{,}500{,}000} = 1.173 \text{ ft}$$

Approximate $L = 806.885 + 0.968 - 1.173 = 806.680$ ft

From equation [23],

$$\Delta^2 = \tfrac{3}{8}a \sec^3 \alpha(L - a \sec \alpha) = 1710.39$$

$$\Delta = 41.36 \text{ ft}$$

* See "Simplified Cable Sag Calculations," by C. M. Goodrich, *Civil Eng.*, January, 1942, p. 104.

From equation [17],

$$H = \frac{wa^2}{8\Delta} = \frac{0.34 \times (800)^2}{8 \times 41.36} = 660 \text{ lb}$$

This compares with the trial value of 646 lb assumed above. A second cycle of computation, using $H = 660$ lb, gives $\Delta = 41.37$ ft and checks the value of H within a pound. Such accuracy of calculation is unwarranted.

79. Transmission Tower Loads. (*a*) *Vertical Loads.* The vertical loads carried by a tower are those due to dead load plus ice on the tower itself, and to the weight of the insulators, the vertical components of the cable pulls, and their ice loads, applied at the ends of the cross arms.

(*b*) *Transverse Loads.* The maximum transverse load is due to wind on the ice-coated cables and tower. If there is an angle in the line at the tower, the normal component of the line pull must be added to or subtracted from the wind, depending on its direction.

(*c*) *Longitudinal Loads.* The maximum longitudinal load on a tower would occur with all cables broken in one span and maximum wind and ice loads on the adjacent span, combined with low temperature. This would involve both longitudinal and transverse bending on the tower.

(*d*) *Torsion* on a tower exists whenever any unsymmetrical breakage of cables occurs. The maximum torsion would occur with all the cables on one side of the tower broken in one span, and those on the other side of the tower broken in the adjacent span, combined with ice, low temperature, and wind.

(*e*) *Impact.* When ice forms on a wire in a sleet storm accompanied by wind, the ice coating is not symmetrical, but is flattened on the windward side and elongated on the leeward side. This unsymmetrical cross section is aerodynamically unstable and causes the cable to undulate in the wind, sometimes "whipping" several feet in long spans. This "whipping" of the cables causes impact stresses at the supports. Also, when the ice load is suddenly dropped from the cable in one span, torsional impact is caused. These impact stresses are seldom calculated, but must be kept in mind in selecting proper working stresses for design.

The vertical and transverse forces described in (*a*) and (*b*) are the normal operating loads and may occur frequently. The forces described in (*c*), (*d*), and (*e*) are extreme, and will occur rarely. They should be provided for at a reduced factor of safety.

Figure 110 shows two successive spans of a transmission line on a uniformly rising grade. If $a = 800$ ft and $h = 40$ ft, the cable stresses are as shown in the problem of Art. 78.

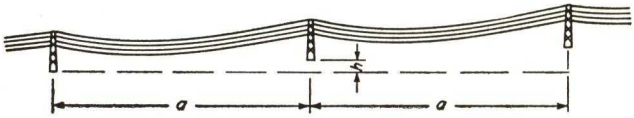

Fig. 110

(*a*) *Vertical Loads.* For the tower between the two spans shown, the vertical load, without wind, but including ice, at each cable connection is

$$\begin{aligned} \text{From cable} &= 1.35 \times 800 = 1080 \text{ lb} \\ \text{Insulators} &= \underline{80} \text{ ''} \\ & 1160 \text{ ''} \end{aligned}$$

The vertical load from each ground cable (say ½-in. transmission rope) is

$$\text{From cable } (0.39 + 1.00) = 1.39 \times 800 = 1110 \text{ lb}$$

No insulators

The dead load of the tower and its ice load may be estimated from the proposed tower design.

(*b*) *Transverse Load.* (No angle in the line.) At each cable connection the transverse load $= 2.00 \times 800 = 1600$ lb. The wind on the ground cables would be practically the same as on the conductor cables. The wind on the towers and insulators must be estimated from the proposed tower design.

(*c*) *Longitudinal Loads.* The maximum line pull on the tower will occur with the wind normal to the line. When a cable in one span is broken, the length of the cable in the adjacent span is increased by the length of the insulator chains (except for the ground cables which have no insulators). The horizontal pull of one ground cable may be taken the same as that calculated in Art. 78 for the conductor cables, viz., 4600 lb. For the conductor cables with one span broken, the length of cable will be approximately $806.885 + 3.00 = 809.885$ ft.

From equation [23],

$$\Delta^2 = \tfrac{3}{8}a \sec^3 \alpha(L - a \sec \alpha) = 2675.5$$

$$\Delta = 51.7 \text{ ft}$$

From equation [17],

$$H = \frac{wa^2}{8\Delta} = \frac{2.42(800)^2}{8 \times 51.7} = 3745 \text{ lb}$$

(*d*) *Torsion.* The torsion forces on the tower may be taken directly from the cable pulls calculated in (*c*) above. The torsional reactions

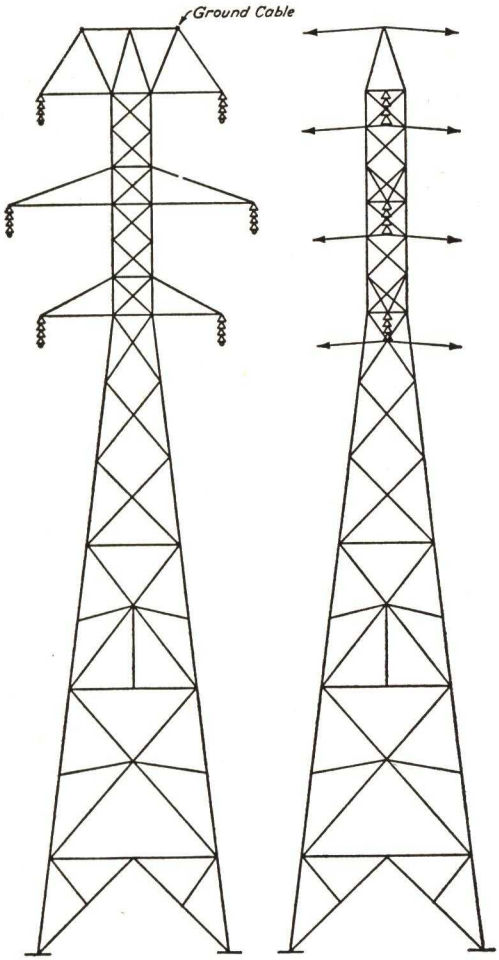

Fig. 111

and the stresses in the tower members may be calculated by the methods given in Chapter VIII.

80. Torsional Stresses. Often the towers are not square in plan, as is the one shown in Fig. 111. In order to illustrate the general

case, a simple rectangular tower as shown in Fig. 112 will be taken.

The framework is assumed to be braced on all four sides and the cross section held rectangular by horizontal bracing at the panel points. The force P is applied at the end of a cross arm at the top of the framework as shown. Under this force the frame distorts as shown by the dotted lines in the plan. The resistances offered by the bracing in the four faces of the tower are indicated by R_A, R_B, R_C, and R_D. The deflections of these four faces are Δ_A, Δ_B, Δ_C, and Δ_D.

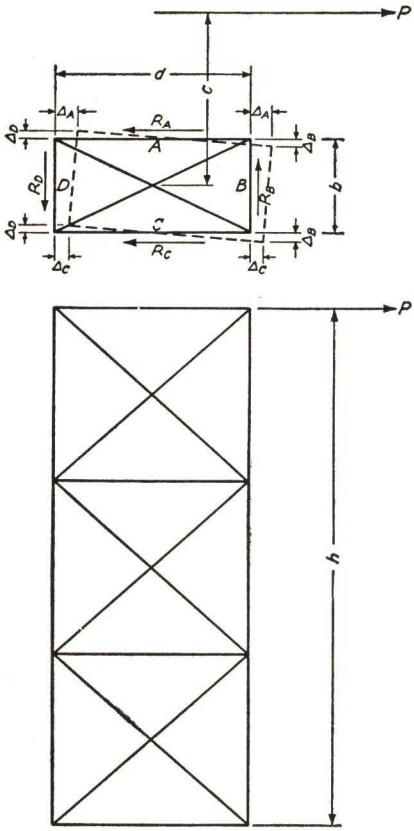

Fig. 112

By statics,

$$R_A + R_C = P \qquad [26]$$

$$R_B + R_D = 0 \qquad [27]$$

$$R_C b - R_D d = P\left(c - \frac{b}{2}\right) \qquad [28]$$

By similar triangles,

$$\frac{\Delta_A - \Delta_C}{b} = \frac{\Delta_B + \Delta_D}{d} \qquad [29]$$

$$\Delta_A = \frac{R_A h^3}{3EI_A} \qquad \Delta_B = \frac{R_B h^3}{3EI_B}$$

$$\Delta_C = \frac{R_C h^3}{3EI_C} \qquad \Delta_D = \frac{R_D h^3}{3EI_D}$$

in which I_A, I_B, I_C, and I_D are the moments of inertia of the frames forming the respective sides of the tower.

If the four columns of the tower are alike,

$$I_A = I_C = 2A\left(\frac{d}{2}\right)^2 = \frac{Ad^2}{2} \qquad I_B = I_D = \frac{Ab^2}{2}$$

$$\frac{I_A}{I_B} = \frac{d^2}{b^2} \quad \text{and} \quad I_B = I_A\frac{b^2}{d^2}$$

Substituting in [29],

$$R_A - R_C = (R_B + R_D)\frac{d}{b}$$

and substituting from [27],

$$R_A - R_C = 2R_D \frac{d}{b} \qquad [30]$$

$$R_A + R_C = P \qquad [26]$$

Adding, $$2R_A = P + 2R_D \frac{d}{b}$$

From equation [28],

$$R_D = R_C \frac{b}{d} - \frac{P}{d}\left(c - \frac{b}{2}\right)$$

$$R_A = \frac{P}{2} + R_C - \frac{P}{b}\left(c - \frac{b}{2}\right)$$

$$R_A - R_C = \frac{P}{2} - \frac{P}{b}\left(c - \frac{b}{2}\right)$$

$$R_A + R_C = P \qquad [26]$$

Adding, $$2R_A = 1\tfrac{1}{2}P - \frac{P}{b}\left(c - \frac{b}{2}\right)$$

$$R_A = \tfrac{3}{4}P - \frac{P}{2b}\left(c - \frac{b}{2}\right) \qquad [31]$$

Substituting in equation [26], $R_C = \tfrac{1}{4}P + \dfrac{P}{2b}\left(c - \dfrac{b}{2}\right)$ [32]

From equation [28], $R_D = R_B = \dfrac{Pb}{4d} - \dfrac{P}{2d}\left(c - \dfrac{b}{2}\right)$ [33]

The forces for which the bracing in the four sides of the tower must be designed are given by equations [31], [32], and [33]. If there are two loads P in opposite directions on opposite ends of the cross arm, the bracing in each of the sides A and C will be designed for a force P and that in each of the sides B and D for $2R_B$ from equation [33].

CHAPTER X

INDUSTRIAL BUILDINGS

81. General Plan. An industrial building is built to accommodate an industry; hence it is seldom possible to arrange the structural framing until the industrial engineer has developed the production scheme. The structural engineer can point out relative costs and the practicability of various framing plans as the industrial layout proceeds. A framing plan which seems too expensive from the structural standpoint may be economical when operation costs, earlier occupancy, and production are considered.

The modern trend is toward simplicity and a repetition of units leading to easy expansion of the industrial plant if warranted at some future time. The exteriors are of simple functional design with architectural embellishments missing, keeping the maintenance costs as low as possible. The interiors have longer spans and hence fewer columns blocking working areas, and overhead areas formerly blocked by trusses can be cleared by using rigid type framing. More thought is being given to controlling the factors of ventilation, lighting, sound insulation, and air conditioning as they affect working conditions and overall costs. Facilities such as walkways for interior maintenance and monorails on the exterior walls to aid window cleaners are typical of modern design.

A complete industrial establishment may include the power plant, office building, and factory. In this chapter we shall be concerned with the factory only.

82. Framing Types. The examples of typical transverse and longitudinal framing that follow are, with one or two exceptions, of the one-story type. Many industrial processes will be better accommodated by the multistory building, but in general the one-story plant eliminates the need of elevators and a waste of time in the handling of materials. The cost of the multistory building per square foot of floor area may run as much as 30% more than the single-story building. In some instances a basement under certain areas of the building may be desirable for small parts storage, locker rooms, and toilets.

For the purpose of definition in the discussions which follow, the *bay* width is the longitudinal spacing of the transverse framing units,

and the *aisle* width is the distance between the column lines measured transversely.

The mill building type of transverse framing is shown in Fig. 113. This type is used when heavy equipment and heavy production are

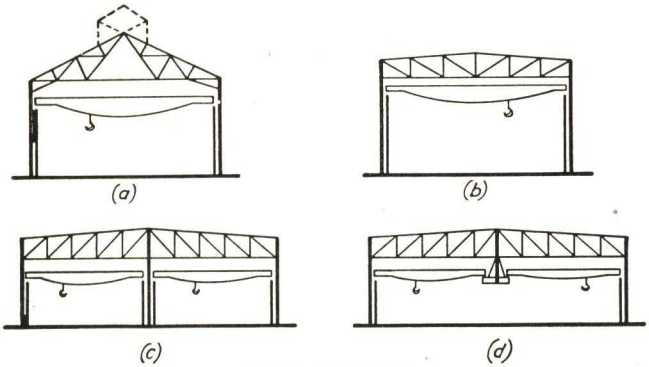

Mill Building Type
Fig. 113

involved, the crane runways normally running the full length of the building. A monitor may be placed on either of the roof framings depicted, for light and ventilation. The exterior walls may be glazed as desired. Figure 113(*c*) indicates the flat roof type with two aisles,

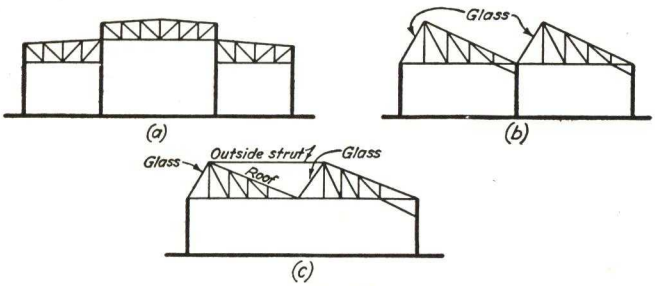

Fig. 114

and Fig. 113(*d*), a scheme by which the center column can be omitted and both center crane runways supported from the truss. With light crane loadings it is possible to frame the supporting runways so that loads may be moved from one aisle to the other. The bay width for the usual mill building runs from 20 to 30 ft.

Figure 114(*a*) is the transverse section of a three-aisle building with the center aisle having a height sufficient to accommodate a heavy

crane. The high framing permits the installation of vertical sash above the low roofs for light and ventilation, and in effect gives a longitudinal monitor. This type of framing is capable of being extended transversely to give more working aisles.

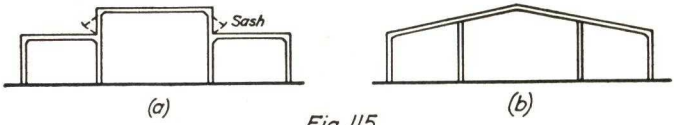

Fig. 115
Three Aisle Rigid Frames

The sawtooth roof shown in Fig. 114(*b*) and (*c*) is used extensively for mills and shop buildings of one story. The plane of the steeper rafter is glazed, and this side is made to face north if possible. By this arrangement the floor below is lighted by an even diffused light, without the necessity of making the building narrow to gain light from the sides, and without the disadvantages of skylights through which the direct rays of the sun may shine. Skylights are also difficult to keep watertight. In machine shops and weaving sheds where columns at short intervals are not objectionable, the short span trusses shown in Fig. 114(*b*) are used. When greater intervals without

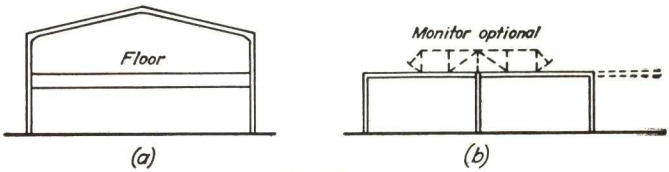

Fig. 116

columns are required, a strut above the roof as shown in Fig. 114(*c*) may be substituted for the intermediate column. This may be continued for two or three units, giving clear spans up to 100 ft where desirable.

The monitor type rigid frame construction is indicated in Fig. 115(*a*). The rigid framing clears the overhead area of truss members and enables a better daylighting of the working areas to be attained. This type of framing may be extended and repeated for as many aisles as necessary. Figure 115(*b*) indicates a rigid frame three-aisle bent. This type of framing is not capable of easy expansion in the future as is the monitor type, and daylighting of the interior floor areas must be obtained by the use of skylights.

In Fig. 116(*a*) the rigid frame construction incorporates a heavy

plate girder to form a second-floor area. In some industrial establishments this may be an ideal arrangement, the second floor being used as a pattern shop, mold loft, or for machining operations with the lower floor used for assembly. By the use of intermediate wall columns, the main transverse bents may be spaced up to 45 or 50 ft apart longitudinally.

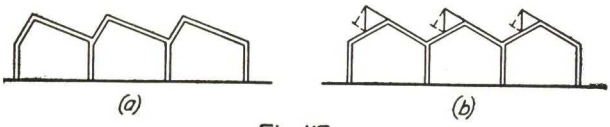

Fig. 117

Beam and column work with semi-rigid connections is a very popular form of framing for small industrial plants. (See Art. 102, Chapter XI.) Figure 116(*b*) shows this form with monitor optional.

Figure 117 again indicates the sawtooth roof, this time as a rigid frame. This type of all welded frame permits clean interiors (see Fig.

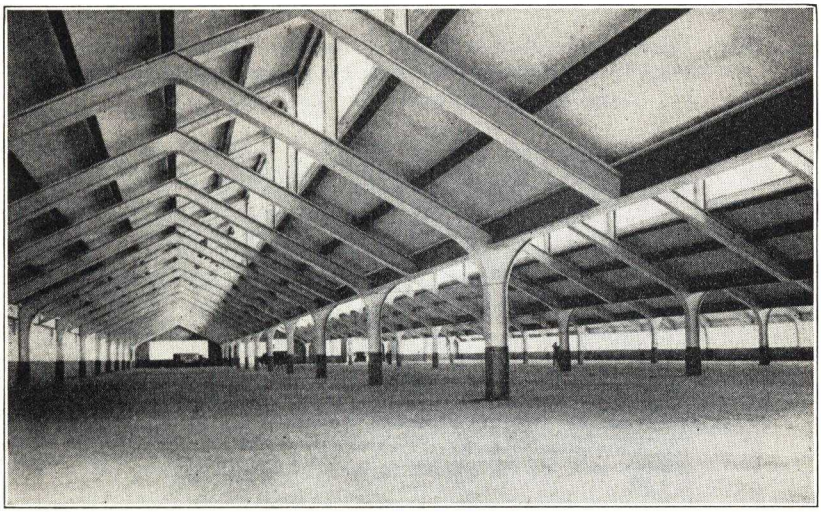

FIG. 118. "Whaleback" rigid frame design showing 40-foot aisles and 40-foot column spacing lengthwise for efficient straight-line production. (Designed and Constructed by the Austin Co.)

118), a sufficient head room for the installation of high equipment, and an efficient utilization for daylighting. It is entirely practicable to space the transverse frames 40 to 45 ft apart.

Figure 119 shows a comparison between typical three-aisle fram-

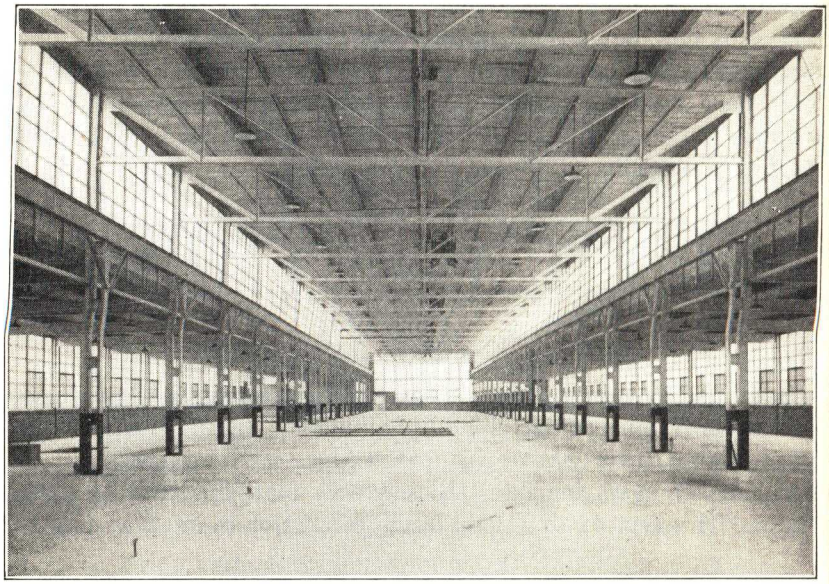

FIG. 119(*a*). Monitor type plant in Chicago, with wide unobstructed working areas designed for heavy-duty traveling bridge crane operation. (Designed and Constructed by the Austin Co.)

FIG. 119(*b*). New plant unit with monitor cross section for Modine Manufacturing Company, La Porte, Indiana, well-known manufacturers of unit heaters. (Designed and Constructed by the Austin Co.)

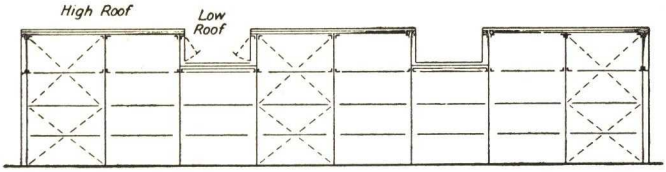

Longitudinal Framing

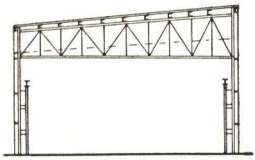

Transverse Framing
Fig. 120

ing with monitor, built with transverse trusses and as a rigid or semi-rigid frame.

The use of the monitor for light and ventilation assumes many forms, as a ridge roof with central longitudinal monitor, a flat roof with longitudinal monitor, a flat roof with transverse monitors, and a flat roof with a combination of longitudinal and transverse monitors. For buildings with a high aisle, the alternate high and low bay construction as shown in Fig. 120, with vertical sash installed above the low roof, may be used and thus reduce the overall height that would be required by a longitudinal monitor.

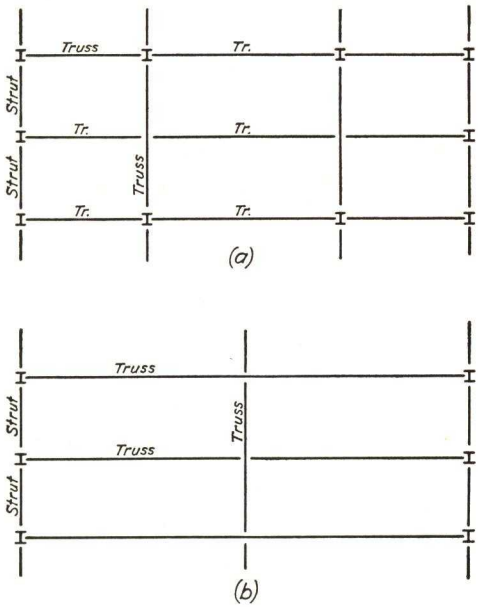

Fig. 121
Column Spacing

In the event that large working areas need to be cleared of objectionable columns, the typical transverse framing must be modified. Figure 121 shows several possibilities. Figure 121 (*a*) shows two interior columns omitted from a

three-aisle building, with longitudinal trusses spanning over two normal bay lengths. Figure 121(*b*) shows how, by means of trusses, all interior columns may be eliminated.

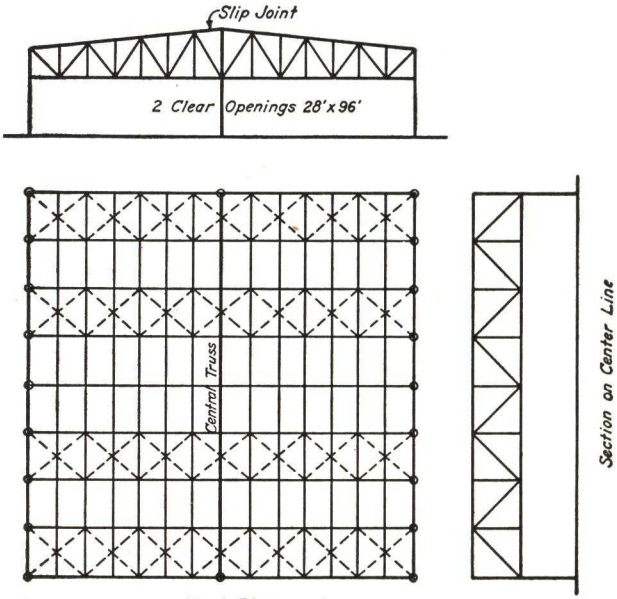

Roof Plan

Columns in outside walls only

Fig. 122

Figure 122 shows an arrangement for a hangar with two wide door openings and the interior entirely clear of columns. Figure 123 shows the same arrangement, but with sawtooth roof.

Figure 124 is an interior view of a mill building with a large proportion of the side walls glazed. Figures 125 and 126 show the exterior and interior views of a modern aircraft factory.

83. Bracing Systems. A building must have rigidity under lateral loading as well as the vertical loading. To stiffen the building to resist wind loads, as well as to minimize vibration caused by equipment, a system of diagonal bracing is installed in the upper and lower chord planes of the roof trusses and in the side and end walls of the building. Authorities differ as to how and where this bracing shall be placed in the structure. The transverse framing of the building, the truss and its supporting columns, is spoken of as the transverse bent. This should be designed to resist the lateral wind

forces brought to it by the exposed and contributing area of each bay. The transverse frame or bent must also be examined for lateral crane thrust. The transverse wind forces may otherwise be assumed to be carried by a horizontal truss system in the plane of the lower chord of the roof truss, with the columns and bracing in the end walls acting as abutments.

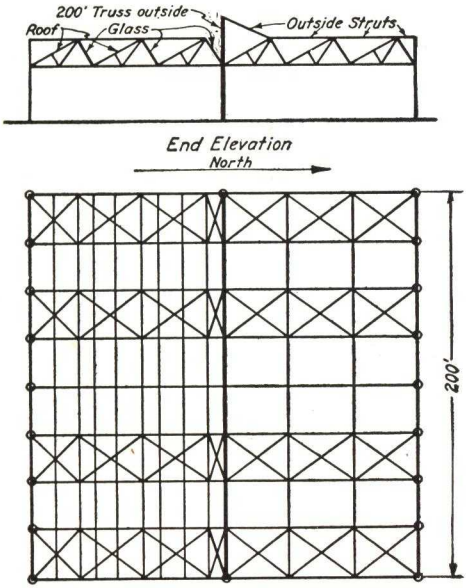

Saw Tooth Design

Columns in outside walls only

Fig. 123

The longitudinal wind acting against the end wall of the building is resisted by the diagonal bracing in the planes of the chords, and the side bracing in the end bay. Other bays may and should be braced as an aid to erection and to prevent vibration. This latter factor is quite important where large wall areas are glazed, thus removing the stiffening effect of a more rigid wall covering. The mill building in Fig. 127 shows the typical arrangement of diagonal bracing. It is to be noted that an eave strut is used for the full length of the building. In practice this strut may be the eave purlin or a shallow Warren type truss.

Where crane runway girders are present, knee braces tie these to

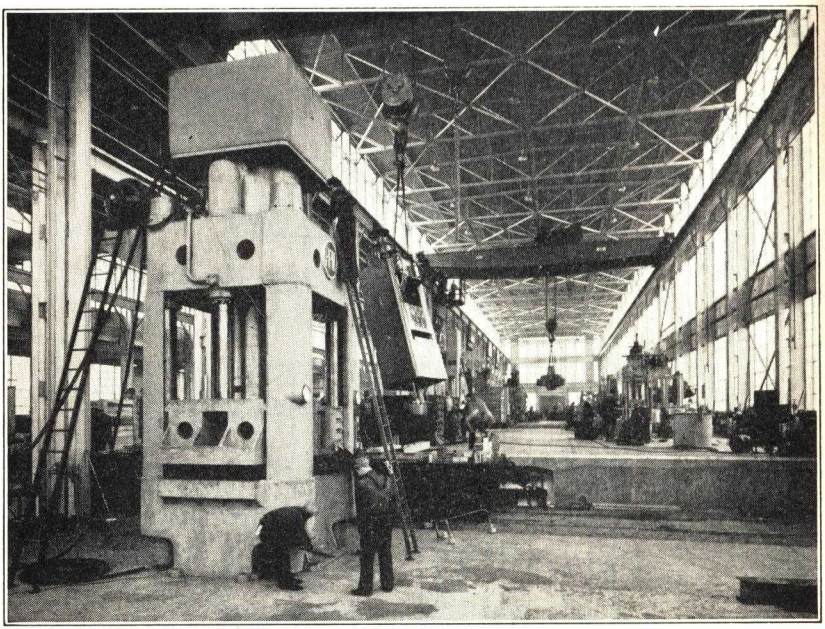

FIG. 124. Hydraulic Press Manufacturing Co., Mt. Gilead, Ohio.
(Designed and built by the Austin Co.)

FIG. 125. Bell Aircraft Corporation.
(Designed and built by the Austin Co.)

FIG. 126. Bell Aircraft Corporation.
(Designed and built by the Austin Co.)

the columns, but bracing in the side walls of the intermediate bays is also needed to transfer to the foundations the forces set up by the starting and stopping of the crane.

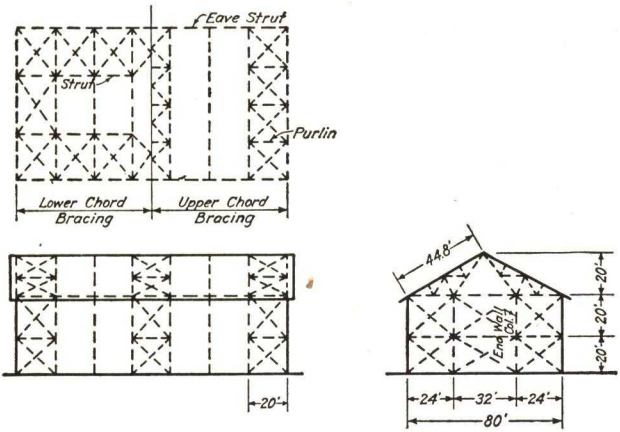

Fig. 127

The building frame shown in Fig. 127 will be used to illustrate the calculation of the forces acting on the bracing system due to a longitudinal wind acting against the end elevation. The wind will be

assumed to have an intensity of 20 lb per sq ft. This wind force must be distributed to the various bracing systems. Figure 128 shows the usual assumptions of this distribution. In Fig. 128 the line AB is drawn bisecting the pitch angle; all areas above the line contribute forces to the upper chord lateral system, and similarly the areas below contribute to the lower chord lateral system. The area marked 5 passes its wind force to the lower lateral system through the end wall column. The end column is designed as a simple beam supported at the truss and at its foundation, to resist the applied wind forces. The force on area 7 is assumed to be delivered to the top of the column at A, and the force on area 8 is taken directly into the side bracing of the end bay. Actually the distribution of the wind to the various structural elements is indeterminate. Using the above assumptions, the wind forces may be computed as follows:

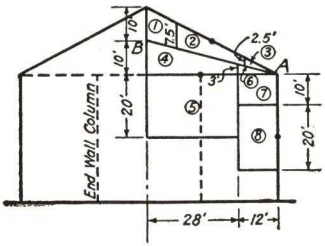

Fig. 128

$P_1 = (10+7.5)\frac{1}{2}\times 20 = 1{,}750$ lb

$P_2 = (7.5+2.5)\frac{2}{2}\times 20 = 2{,}000$ "

$P_3 = \frac{1}{2}\times 2.5\times 10\times 20 = 250$ "

$P_4 = (10+3)\frac{28}{2}\times 20 = 3{,}640$ "

$P_5 = 20\times 28\times 20 = 11{,}200$ lb

$P_6 = \frac{1}{2}\times 3\times 12\times 20 = 360$ "

$P_7 = 10\times 12\times 20 = 2{,}400$ "

$P_8 = 12\times 20\times 20 = 4{,}800$ "

Figures 129 and 130 show these computed panel point loadings applied to the lateral systems. The tops of the columns at the sides of the building form the reaction points. The total load is assumed

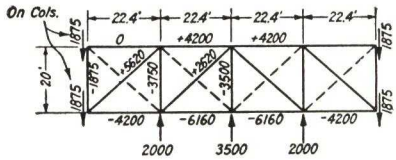

Upper Chord Lateral System
Fig. 129

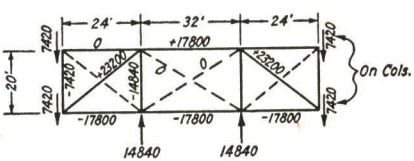

Lower Chord Lateral System
Fig. 130

to be equally divided among the four columns. The end struts for each system are the eave struts. The intermediate struts for the top lateral system, shown in Fig. 129, are the roof purlins. For the bottom lateral system shown in Fig. 130, double angle struts are used. The diagonals are assumed to take tension only. If diagonals

are used which have the required stiffness, the two diagonals in a panel may be assumed to share the shear equally, giving diagonal stresses equal to one-half those shown. The stresses would be compression for one diagonal and tension for the other. The chord stresses also would be modified.

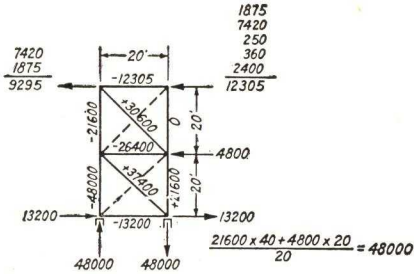

Wall Bracing in End Bay
Fig. 131

Figure 131 shows the analysis of the stresses in the bracing of the walls of the end bay. Tension diagonals again have been assumed. It will be noted that the columns carry considerable stress, which may be a factor in the design of these end columns. The eave strut has been common to all three of the bracing systems discussed and should accordingly be carefully examined.

84. Design Problem. To illustrate the problems met in the design of factory buildings, one bay of a building with a cross section as shown in Fig. 132 will be designed.

The data assumed are:

Roof, built up composition on 2-in. matched sheeting.
Side walls, No. 22 galvanized corrugated steel.

Roof truss loads,

Roofing	3 lb per sq ft	
Sheeting	7 " " " "	
Purlins	5 " " " "	
Trusses	5 " " " "	
Snow	30 " " " "	(See Art. 3.)
Total	50 " " " "	

Wind load on the walls 20 lb per sq ft. (See Art. 6.)

One 40-ton crane is assumed to operate in the aisle with 25% impact and 20% lateral thrust.

The longitudinal bay width is 25 ft center to center of trusses.

The specifications of the American Institute of Steel Construction for the Design and Erection of Structural Steel for Buildings will be used.

Before the roof trusses can be designed, the stresses in the members due to (1) roof loads, (2) crane thrust, and (3) wind loads must be

determined. The effect upon the trusses of wind and crane thrust will depend upon the column design, so we shall proceed with the design of the crane runway girders and columns first.

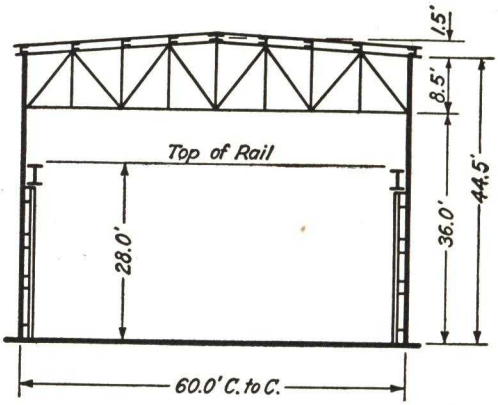

Fig. 132

85. Crane Runway. For this problem it is assumed that one 40-ton electric crane will be operated in the single aisle. The crane runways are girders spanning the distance between crane columns, 25 ft. The end trucks carrying the crane girders have two wheels spaced 12 ft, 8 in. apart. The maximum wheel loads include the weight of the crane and accessories in addition to the maximum effect of the 40-ton rated load. This maximum is obtained with the crane trolley as close to the end trucks as practicable. A designer should always refer to the crane manufacturers for exact wheel concentrations and wheel spacings.

A crane is a very much abused and often overloaded piece of equipment. In many cases a 100% overload is tolerated continually instead of installing adequate equipment. A readjustment of a load caused by the slipping of a chain or the crushing of a wood block may also cause severe impact loads. In runway design it is customary to specify a 25% impact factor. The starting and stopping of the crane or trolley may cause longitudinal and transverse forces which must be resisted by the structural frame. They may amount to as much as 20% of the *maximum wheel loadings* for longitudinal effect and the same percentage of the *rated loading* for lateral effect.

The runway girder may be made up of a channel and beam as shown in Fig. 144, or by placing the channel on top of the beam as shown in Fig. 135. This latter form is to be preferred since it avoids the

analysis of an unsymmetrical section when considering resistance to lateral forces.

The runway girder is unsupported laterally from column to column, and the additional flange width given by using a channel assists in keeping the L/b ratio within reasonable limits. In addition to this the channel and the top flange of the beam will work together in resisting the lateral thrust of the crane, since it is usually assumed that the top flange material only is effective in resisting these lateral forces. The entire beam section works together in resisting the vertical loads, and the stress due to both lateral and vertical loads must not exceed

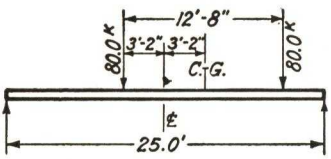

Fig.133

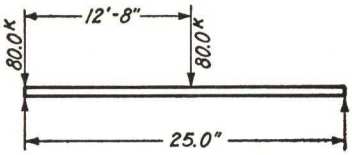

Fig.134

the allowable. The design of the girder is normally a trial and error process. In the computations which follow a modified solution for the combined stresses is given as an aid in selecting the cross section. The following computations are self-explanatory. The maximum bending moment in the girder is obtained by adding the dead load moment at the center to the live load moment under the nearest wheel. This is a small error on the safe side and is sufficiently accurate.

Figures 133 and 134 show the placement of the loads for maximum moment and for maximum shear, respectively.

Estimated dead load

Channel	45 lb per ft
Beam	180 " " "
Rail	35 " " "
Total	260 " " "

Moment

Live load $\dfrac{160.0 \times 9.33^2}{25.0} = 557.0$ ft-kips

Impact 25% $= 139.2$ "

Dead load $\dfrac{0.260 \times 25^2}{8} = 20.3$ "

Total $= 716.5$ "

Shear

Live load	$\dfrac{160.0 \times 18.67}{25.0}$	= 119.5 kips	
Impact 25%		= 29.9	"
Dead load	$\dfrac{0.260 \times 25}{2}$	= 3.2	"
	Total	= 152.6	"

$$\text{Lateral thrust due to rated loading} = \frac{0.2 \times 40 \times 2.0}{2}$$

$$= 8.0 \text{ kips per wheel}$$

$$M_L = \text{maximum lateral moment} = \frac{16.0 \times 9.33^2}{25} = 55.7 \text{ ft-kips}$$

Figure 135 shows the cross section of the runway girder.

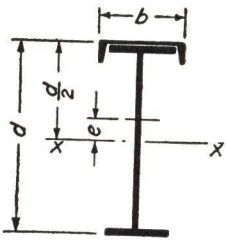

Fig.135

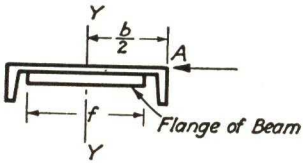

Fig. 136

To assist in the trial and error solution which must take into account the combined fiber stresses at A, Fig. 136, the following approximate formulas have been developed.

For vertical loading, $s = \dfrac{Mc}{I}$

Calling the effective depth and the over all depths the same,

$$c = \frac{d}{2} - e \text{ for extreme compression fiber.}$$

Let A_c = area of the channel,
A_B = area of the beam,
I_B = moment of inertia of the beam about axis X–X.

Then

$$e = \frac{\frac{1}{2}dA_c}{A_c + A_B} \quad \text{and} \quad c = \frac{d \times A_B}{2(A_c + A_B)}$$

$$I = I_B + A_B e^2 + A_c(\tfrac{1}{2}d - e)^2 = \frac{I_B(A_c + A_B) + A_c A_B(\frac{1}{2}d)^2}{A_c + A_B}$$

$$s_A = \frac{Mc}{I} = \frac{M \times \frac{1}{2}d}{A_c(\frac{1}{2}d)^2 + I_B \dfrac{A_c + A_B}{A_B}} \qquad \text{(approximate)} \qquad [1]$$

For lateral loading, Fig. 136 shows the assumed effective cross section.

$$I_Y = I_c + I_F = I_c + \frac{A_F f^2}{12}$$

$$s_A = \frac{M_L \frac{1}{2}b}{I_Y} \qquad [2]$$

Trial design

36″ WF 182# + 15″ Chan. 45#

$A_c = 13.17$ in.^{2} $\quad I_c = 374$ in.^{4} $\quad A_B = 53.54$ in.^{2} $\quad I_B = 11{,}282$ in.^{4}

$$\frac{L}{b} = \frac{25 \times 12}{15} = 20$$

$$\text{Allowed bending unit stress} = \frac{22{,}500}{1 + \dfrac{L^2}{1800b^2}} = 18{,}410 \text{ psi}$$

Approximate fiber stress at A,

$$\text{Due to vertical load, } s_A = \frac{716{,}550 \times 12 \times 18}{13.17 \times 18 \times 18 + \dfrac{11{,}282 \times 66.71}{53.54}}$$

$$= 8450 \text{ psi}$$

$$I_Y = 374 + \frac{14.24(12.07)^2}{12} = 546.9 \text{ in.}^4$$

$$\text{Due to lateral loading, } s_A = \frac{55{,}700 \times 12 \times 7.5}{546.9} = 9170 \text{ psi}$$

Maximum fiber stress at A = 8,450 + 9,170 = 17,620 psi

This is about 800 lb per sq in. below the allowed.

By exact analysis, $e = 3.55$ in. $\quad I = 14{,}713$ in.^{4} $\quad c = 15.23$ in.

From vertical loads, s_A = 8,890

From lateral loads, s_A = 9,170

Total = 18,060 psi. Satisfactory.

The tensile stress in the bottom flange due to vertical loading is

$$s_t = \frac{716{,}550 \times 12 \times 21.71}{14{,}713} = 12{,}690 \text{ psi}$$

It is to be noted that in calculating this fiber stress in the tension flange the gross moment of inertia has been used. This is permissible because there are no rivet holes in the bottom flange. Even if cover plates were riveted to the bottom flange, the American Institute of Steel Construction specifications (Section 20) permit the use of the gross moment of inertia. Many designers do not agree with this procedure and use the moment of inertia of the net section in calculating stresses in the tension flange.

Flange Riveting. The channel must be secured to the top flange of the beam with enough rivets to transmit the horizontal shear at the point.

$$\text{The horizontal shear per inch} = \frac{VQ}{I}$$

in which

V = maximum vertical shear = 152.6 kips,

Q = statical moment of the area of the channel about the neutral axis = $13.17 \times (17.99 - 3.55) = 190$ in.^{3},

I = moment of inertia = 14,713 in.^{4}

$$\text{Horizontal shear per inch} = \frac{152{,}600 \times 190}{14{,}713} = 1970 \text{ lb}$$

Using ⅞-in. rivets, the single shear value of a rivet is 9020 lb.

$$\text{Required rivet pitch at the end of the girder} = \frac{9020}{1970} = 4.6 \text{ in., staggered.}$$

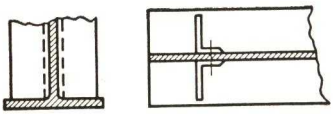

Fig. 137

End Stiffeners. Stiffeners are required over the bearing of the girder on the crane column. (See Fig. 137.) The allowed bearing unit stress of the outstanding leg of the stiffener angle on the flange is 27,000 lb per sq in.

$$\text{Required bearing area} = \frac{152{,}600}{27{,}000} = 5.65 \text{ sq in.}$$

Assuming the usable portion of the outstanding leg to be 4 in., the required angle thickness $= \dfrac{5.65}{2 \times 4} = 0.71$ in. Try 2 ∟s 5 in. × 3½ in. ×

¾ in. As a column, the unit stress on the two stiffeners should not exceed 20,000 lb per sq in.

$$\text{Column capacity} = 2 \times 5.81 \times 20{,}000 = 232{,}400 \text{ lb. Sufficient.}$$

The number of ⅞-in. rivets required to secure the stiffeners to the web $= \dfrac{152{,}600}{18{,}040} = 9$ rivets in double shear.

86. Design of Crane Columns. The columns carrying the crane runway girders and the roof columns will be designed independently, although they are connected at intervals by diaphragms. (See Fig. 144.) The loads on the crane column are

Dead load = 0.260 × 25	=	6,500 lb
Live load (see Fig. 134)	=	119,500 "
Impact = 25%	=	29,900 "
Total	=	155,900 "

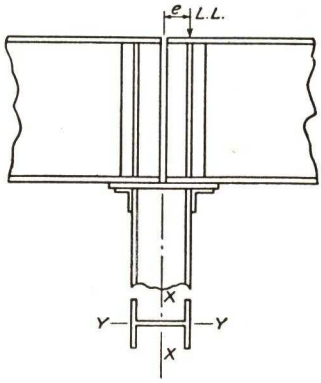

Fig. 138

Assuming the live load to be applied 6.5 in. from the center of the column (see Fig. 138), the bending moment on the column is

$$149{,}400 \times 6.5 = 971{,}000 \text{ in.-lb}$$

The column length is 24 ft, 6 in. (see Fig. 132), and the column will be considered to be unsupported about the X–X axis for its full height. The diaphragms connecting it to the roof column (see Fig. 144) will be spaced to make the L/r ratio about the Y–Y axis not greater than that about the X–X axis.

Try a 14″ H 68# Area = 20.00 sq in. r = 6.02 in.

$$\frac{L}{r} = \frac{24.5 \times 12}{6.02} = 49 \qquad \text{Allowed unit stress} = 15{,}840 \text{ psi}$$

From the specifications, Art. 6(a),

$$\frac{f_a}{F_a} + \frac{f_b}{F_b} = 1$$

in which

F_a = axial unit stress that would be permitted if axial stress only existed,

F_b = bending unit stress that would be permitted if bending stress only existed,

f_a = actual axial unit stress = D/A

f_b = actual bending unit stress = Mc/I.

From this the required area of the member is

$$A = \frac{D}{f_a} + \frac{Mc}{r^2 f_b}$$

Then

$$A = \frac{155{,}900}{15{,}840} + \frac{971{,}000 \times 7.03}{(6.02)^2 \times 20{,}000} = 9.85 + 9.43 = 19.28 \text{ sq in.}$$

The section chosen is satisfactory.

Spacing of Diaphragms. The radius of gyration about the Y–Y axis is 2.46 in. The unsupported length between the diaphragms must not exceed 49 × 2.46 = 120 in., or 10 ft. Two intermediate diaphragms should be used, dividing the column height into three approximately equal parts.

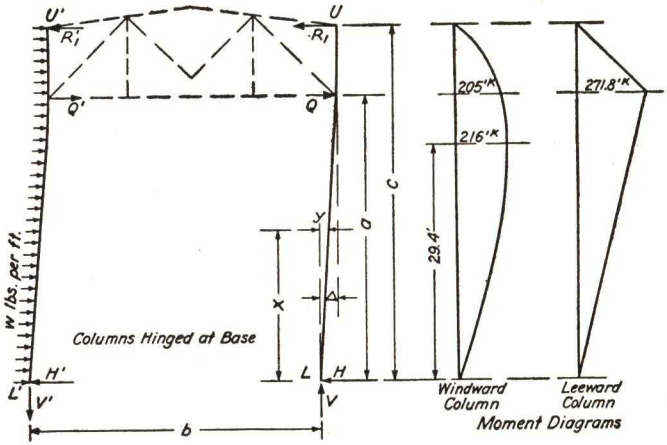

Fig. 139

87. Roof Columns. Wind Load. The roof columns must carry the vertical loads from the roof, the lateral loads due to wind, and the lateral thrust from the crane.

The wind load is 20 lb per sq ft of wall surface (Art. 6), which is considered to be uniformly distributed to the windward column by the wall girts as shown in Fig. 139.

The degree of fixity of the columns at their bases is indeterminate. It certainly lies somewhere between a fixed end and a hinged end.

As a basis for judgment in selecting a safe design, the stresses in the columns will be worked out for both conditions. Figures 139 and 140 show the loads and reactions for the two cases.

The reactions for the two cases may be found by the methods of Chapter VI, using (1) integration of the elastic lines, (2) area moments, (3) the slope deflection method, or (4) by the Cross method.

When the columns are considered to be *hinged* at the base as shown in Fig. 139, there are four unknowns. They are found by setting the deflections of the two columns at R_1 and Q equal to each other, and by the three equations of statics.

The deflections of the columns may be found by integrating the equations of the elastic lines.

Leeward Column. Origin at L. x measured along the column.

When $x < a$,

$$EI\frac{d^2y}{dx^2} = M = Hx \qquad [3]$$

$$EI\frac{dy}{dx} = \tfrac{1}{2}Hx^2 + C_1 \qquad [4]$$

$$EIy = \tfrac{1}{6}Hx^3 + C_1x + (C_2 = 0) \qquad [5]$$

When $x = 0$, $y = 0$, and $C_2 = 0$.

When $x > a$,

$$EI\frac{d^2y}{dx^2} = Hx - Q(x - a) \qquad [6]$$

$$EI\frac{dy}{dx} = \tfrac{1}{2}Hx^2 - Q(\tfrac{1}{2}x^2 - ax) + C_3 \qquad [7]$$

$$EIy = \tfrac{1}{6}Hx^3 - Q(\tfrac{1}{6}x^3 - \tfrac{1}{2}ax^2) + C_3x + C_4 \qquad [8]$$

When $x = a$, $\frac{dy}{dx}$ from [4] $= \frac{dy}{dx}$ from [7].

$$C_1 = \tfrac{1}{2}Qa^2 + C_3 \qquad [9]$$

When $x = a$, y from [5] $= y$ from [8].

$$C_1 = \tfrac{1}{3}Qa^2 + C_3 + \frac{C_4}{a} \qquad [10]$$

Subtracting [9] from [10],

$$C_4 = \tfrac{1}{6}Qa^3 \qquad [11]$$

In equation [8], when $x = a$ and when $x = c$, $y = \Delta$. Equating these,

$$C_3 = \tfrac{1}{6}Q(c^2 - 2ac - 2a^2) - \tfrac{1}{6}H(c^2 + ac + a^2) \qquad [12]$$

When $x = a$, equation [8] becomes

$$EI\Delta = \tfrac{1}{6}Qa(c - a)^2 - \tfrac{1}{6}Hac(c + a) \qquad [13]$$

Windward Column. Origin at L'.

When $x < a$,

$$EI\frac{d^2y}{dx^2} = M = H'x - \frac{wx^2}{2} \qquad [14]$$

$$EI\frac{dy}{dx} = \tfrac{1}{2}H'x^2 - \frac{wx^3}{6} + C_5 \qquad [15]$$

$$EIy = \tfrac{1}{6}H'x^3 - \frac{wx^4}{24} + C_5x + C_6 \qquad [16]$$

When $x > a$,

$$EI\frac{d^2y}{dx^2} = H'x - \frac{wx^2}{2} - Q'(x - a) \qquad [17]$$

$$EI\frac{dy}{dx} = \tfrac{1}{2}H'x^2 - \frac{wx^3}{6} - Q'(\tfrac{1}{2}x^2 - ax) + C_7 \qquad [18]$$

$$EIy = \tfrac{1}{6}H'x^3 - \frac{wx^4}{24} - Q'(\tfrac{1}{6}x^3 - \tfrac{1}{2}ax^2) + C_7x + C_8 \qquad [19]$$

When $x = a$, $\dfrac{dy}{dx}$ from [15] $= \dfrac{dy}{dx}$ from [18].

$$C_5 = \tfrac{1}{2}Q'a^2 + C_7 \qquad [20]$$

When $x = a$, y from [16] $= y$ from [19].

$$C_5 = \tfrac{1}{3}Q'a^2 + C_7 + \frac{C_8}{a} \qquad [21]$$

Subtracting [20] from [21],

$$C_8 = \tfrac{1}{6}Q'a^3 \qquad [22]$$

In equation [19], when $x = a$ and when $x = c$, $y = \Delta$. Equating these,

$$C_7 = \frac{w}{24}(c + a)(c^2 + a^2) - \tfrac{1}{6}H'(c^2 + ac + a^2) + \tfrac{1}{6}Q'(c^2 - 2ac - 2a^2) \qquad [23]$$

When $x = a$, equation [19] becomes

$$EI\Delta = \frac{wac}{24}(c^2 + ac + a^2) + \tfrac{1}{6}Q'a(c - a)^2 - \tfrac{1}{6}H'ac(c + a) \qquad [24]$$

Equating the values of Δ from [13] and [24],

$$Qa(c-a)^2 - Hac(c+a) - Q'a(c-a)^2 + H'ac(c+a) = \frac{wac}{4}(c^2 + ac + a^2) \qquad [25]$$

$$\text{By moments at } U, \quad Hc - Q(c-a) = 0 \qquad [26]$$

$$\text{By moments at } U', \quad H'c - Q'(c-a) = \frac{wc^2}{2} \qquad [27]$$

$$\sum\text{Horiz. comp.} = 0, \quad H + H' = wc \qquad [28]$$

The values of the constants from Fig. 132 are

$$a = 36.0 \text{ ft} \qquad c = 44.5 \text{ ft} \qquad w = 500 \text{ lb per ft}$$

Solving the four equations [25], [26], [27] and [28] simultaneously,

$$H = 7.55 \text{ kips} \qquad Q = 39.52 \text{ kips}$$
$$H' = 14.70 \text{ kips} \qquad Q' = 18.71 \text{ kips}$$

By moments about the base of the windward column,

$$V = -V' = \frac{wc^2}{2b} = 8250 \text{ lb}$$

From these the moment diagrams may be drawn as shown in Fig. 139.

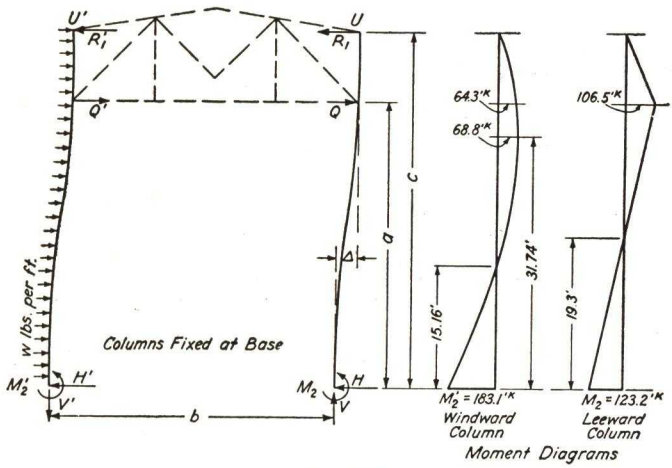

Fig. 140

When the columns are considered to be *fixed* at the base as shown in Fig. 140, there are six unknowns. These are found by setting the deflections of the columns at R_1, R_1', Q, and Q' equal to each other,

and the tangents to the elastic lines vertical at the bases, together with the three equations of statics. From the deflection equations,

$$Ha - 3M_2 - H'a + 3M_2' = -\frac{wa^2}{4} \qquad [29]$$

$$H(c^2 + ac + a^2) - Q(c - a)^2 - 3M_2(c + a) = 0 \qquad [30]$$

$$H'(c^2 + ac + a^2) - Q'(c - a)^2 - 3M_2'(c + a) = \frac{w}{4}(c^2 + a^2)(c + a) \qquad [31]$$

By moments at U, $\quad Hc - Q(c - a) - M_2 = 0 \qquad [32]$

By moments at U', $\quad H'c - Q'(c - a) - M_2' = \frac{wc^2}{2} \qquad [33]$

$\sum$Horiz. comp. $= 0 \quad H + H' = wc \qquad [34]$

Substituting the values of the constants and solving the six equations simultaneously,

$H = 6.38$ kips $\quad M_2 = 123.2$ ft-kips $\quad Q = 18.91$ kips

$H' = 15.87$ kips $\quad M_2' = 183.1$ ft-kips $\quad Q' = 3.31$ kips

By moments about the base of the windward column,

$$V = -V' = \frac{wc^2}{2b} - \frac{M_2 + M_2'}{b} = 3150 \text{ lb}$$

From these the moment diagrams may be drawn as shown in Fig. 140.

From the moments shown in Figs. 139 and 140 it is evident that the maximum bending moment on any column cannot exceed 271.8 ft-kips. There is no doubt that the bases of the columns exert considerable restraint, and it is probably safe to use the mean between the two moment curves. The maximum positive moment in the windward column would then be about 142.4 ft-kips at a point about 6 ft below the bottom chord of the truss and the negative moment 91.6 ft-kips at the base.

For the leeward column the maximum positive moment at the bottom chord of the truss would be 189.1 ft-kips, and the negative moment at the base, 61.6 ft-kips. The vertical load on the leeward column due to wind would be about 5.7 kips.

88. Roof Columns. Crane Thrust. The lateral thrust caused by stopping the crane trolley when traveling in a transverse direction is taken as 20% of the rated loading. This is divided between the two crane wheels spaced 12 ft, 8 in. apart, as shown in Fig. 134, 8,000 lb

per wheel. This gives a total horizontal force at the column of 12,000 lb. This force must be assumed to be applied in either direction, all at one column, as shown in Fig. 141.

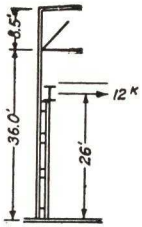

Fig. 141

While the crane column is attached to the roof column, it will not be considered as adding to the lateral strength of the roof column. Here again the degree of fixity of the column bases is indeterminate and the reactions and bending moments will be worked out for both hinged and fixed ends. Figures 142 and 143 show the loads and reactions for the two cases.

When the columns are considered *hinged* at the bases as shown in Fig. 142, there are four unknowns, as there were for wind under the same conditions. From deflections,

$$Qa(c-a)^2 - Hac(c+a) - Q'a(c-a)^2 + H'ac(c+a) = Pac(c+a) - Pd(3ac - d^2) \quad [35]$$

By moments at U, $\quad Hc - Q(c-a) = 0 \quad [36]$

By moments at U', $\quad H'c - Q'(c-a) = P(c-d) \quad [37]$

$\sum$Horiz. comp. $= 0 \quad H + H' = P \quad [38]$

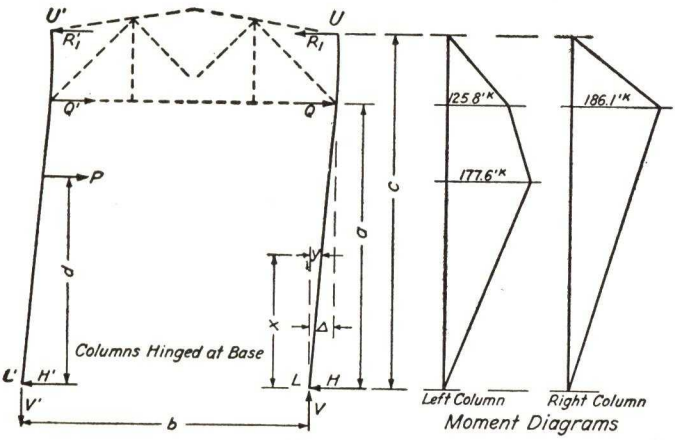

Fig. 142

Substituting the values of the constants from Fig. 141, and solving these equations simultaneously,

$H = 5.17$ kips $\quad Q = 27.07$ kips $\quad H' = 6.83$ kips $\quad Q' = 9.62$ kips

$V = -V' = 5.2$ kips

From these the moment diagrams are constructed as shown in Fig. 142.

When the columns are considered to be *fixed* at the bases, as shown in Fig. 143, the equations involving the six unknowns are:
From deflections,

$$Ha - 3M_2 - H'a + 3M_2' = -\frac{P(a-d)^3}{6a^2} \qquad [39]$$

$$H(c^2 + ac + a^2) - 3M_2(c + a) - Q(c - a)^2 = 0 \qquad [40]$$

$$H'(c^2 + ac + a^2) - 3M_2'(c + a) - Q'(c - a)^2 = P(a^2 + ac + c^2) - 3Pd(c + a - d) \qquad [41]$$

By moments at U, $\quad Hc - Q(c - a) - M_2 = 0 \qquad [42]$

By moments at U', $\quad H'c - Q'(c - a) - M_2' = P(c - d) \qquad [43]$

$\sum$Horiz. comp. $= 0 \qquad H + H' = P \qquad [44]$

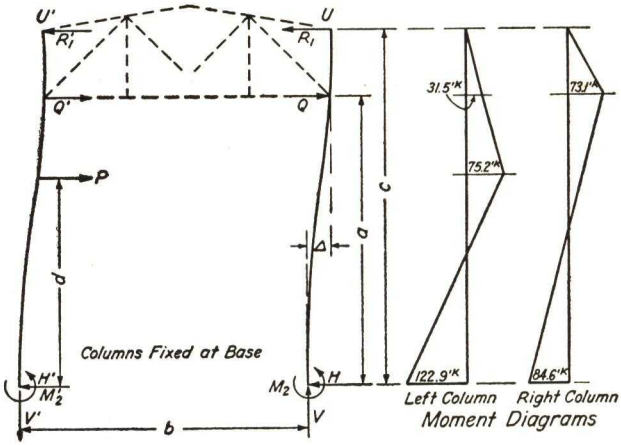

Fig. 143

Putting in the values of the constants and solving the equations simultaneously,

$H = 4.38$ kips $\qquad M_2 = 84.59$ ft-kips $\qquad Q = 12.98$ kips

$H' = 7.62$ kips $\qquad M_2' = 122.95$ ft-kips $\qquad Q' = -0.68$ kips

$V = -V' = 1.74$ kips

From these the moment diagrams are constructed as shown in Fig. 143.

From the moments shown in Figs. 142 and 143 it is evident that the maximum bending moment in the columns cannot exceed 186.1 ft-kips. If the mean between the two moment curves for the left-hand column is taken, the maximum positive moment would be about 126.4

ft-kips at the crane girder, and the negative moment at the base 61.4 ft-kips.

For the right-hand column the maximum positive moment at the bottom chord of the truss would be 129.6 ft-kips, and the negative moment at the base, 42.3 ft-kips. The vertical load on a column due to crane thrust would be about 3.5 kips.

89. Design of Roof Columns. The columns will be assumed to be unsupported from the bottom chord of the truss to the base in the transverse direction, but in the longitudinal direction a continuous strut will be placed 18 ft above the base, which will reduce the unsupported length in that direction to 18 ft.

The columns will first be proportioned for dead and live loads. The direct roof load to be carried is 37,520 lb (see Fig. 146). To this will be added the direct load due to crane thrust, 3500 lb, and the crane thrust moment of 129,600 ft-lb. This moment occurs at the bottom chord of the truss where the column is supported in both directions, but the moment in the other column at the crane girder is nearly as large, and at this point the column is unsupported in a transverse direction.

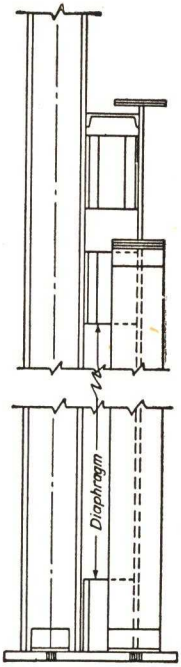

Fig. 144

Try a 14″ *H* 84# Area = 24.71 sq in. r_X = 6.13 in. r_Y = 3.02 in.

Section modulus = 130.9 in.^{3}

$$\frac{L}{r} = \frac{18 \times 12}{3.02} = 71.5 \quad \text{Allowed unit stress} = 14{,}520 \text{ psi}$$

Following the same procedure used in Art. 86,

$$A = \frac{41{,}020}{14{,}520} + \frac{129{,}600 \times 2}{(6.13)^2 \times 20{,}000} = 2.82 + 20.69 = 23.51 \text{ sq in.}$$

This is satisfactory.

This section must now be investigated for wind stress. It is assumed that the maximum crane thrust will not occur at the same time as the maximum wind.

$$\text{Direct load} = 37{,}520 + 5700 = 43{,}220 \text{ lb}$$

$$\text{Wind bending} = 189{,}100 \text{ ft-lb}$$

$$\text{Allowed column unit stress} = 1\tfrac{1}{3} \times 14{,}520 = 19{,}360 \text{ psi}$$

Allowed bending unit stress $= 1\frac{1}{3} \times 20{,}000 = 26{,}670$ psi

$$\text{Reqd. area} = \frac{43{,}220}{19{,}360} + \frac{189{,}100 \times 12}{(6.13)^2 \times 26{,}670}$$

$$= 2.23 + 22.64 = 24.87 \text{ sq in.}$$

Because of wind, the column section must be increased to 14″ H 87#.

$$\text{Area} = 25.56 \text{ sq in.}$$

Figure 145 shows alternate designs for a combined roof and crane column. This type is not so desirable as the type just designed because of the sharp change in section at the seat for the runway girders, and because of the highly indeterminate eccentricities of the loads.

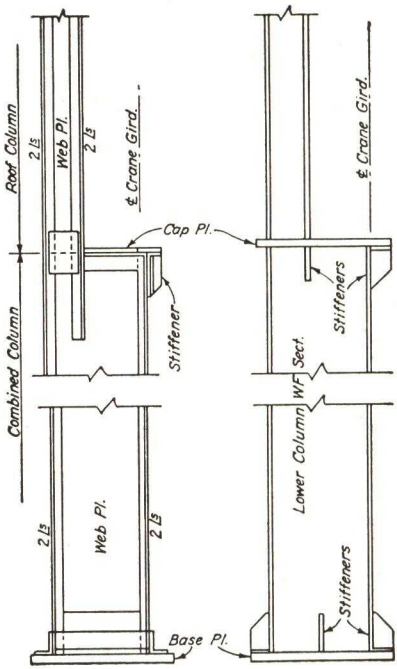

Fig. 145

90. Design of Roof Trusses. Based on the roof load of 50 lb per sq ft given in Art. 84, the panel load on the truss is

$$7.5 \times 25 \times 50 = 9380 \text{ lb}$$

Considering the truss as simply supported at the ends, the stress diagram for vertical loads is drawn as shown in Fig. 146.

The forces due to lateral loads, exerted by the columns on the truss, are represented by R_1, R_1', Q, Q', V, and V'. The values for these were

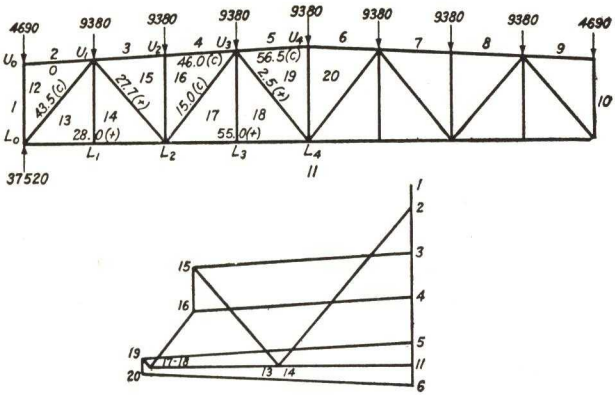

One half Diagram
Vertical Loads
Fig. 146

calculated in Arts. 87 and 88. Using the values for which the columns were designed, they are:

For crane thrust,

$R_1 = 15.25$ kips $R_1' = 9.25$ kips $Q = 20.03$ kips $Q' = 4.47$ kips
$V = -V' = 3.5$ kips

For wind,

$R_1 = 22.61$ kips $R_1' = 17.98$ kips $Q = 29.58$ kips $Q' = 11.01$ kips
$V = -V' = 5.75$ kips

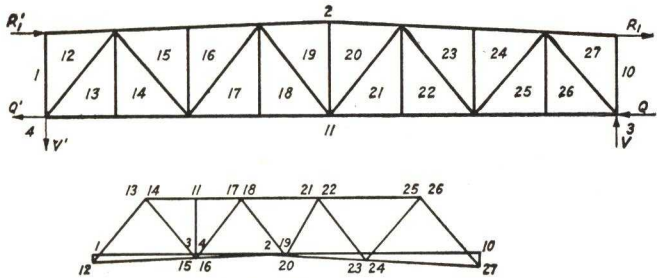

Lateral Loads
Fig. 147

The stress diagram for wind is shown in Fig. 147. That for crane thrust is similar. The following table gives the values of the stresses in the members, in kips, for the several loadings:

Member	Vertical Load	Crane Thrust	Vertical + Crane	Wind Load	D. L. Alone
L_0U_1	43.5(*c*)	5.5(*c*) 5.1(*t*)	49.0(*c*)	9.0(*c*) 8.5(*t*)	17.4(*c*)
U_1L_2	27.7(*t*)	5.0(*t*) 4.8(*c*)	32.7(*t*)	8.2(*t*) 7.8(*c*)	11.1(*t*)
L_2U_3	15.0(*c*)	5.0(*c*) 4.7(*t*)	20.0(*c*)	8.2(*c*) 7.8(*t*)	6.0(*c*)
U_3L_4	2.5(*t*)	4.5(*t*) 4.3(*c*)	7.0(*t*)	7.6(*t*) 7.0(*c*)	1.0(*t*)
U_2L_2	9.4(*c*)	0	9.4(*c*)	0	0
U_4L_4	3.5(*c*)	0.5(*c*)	4.0(*c*)	0.4(*c*)	1.4(*c*)
L_0L_2	28.0(*t*)	1.3(*t*) 16.4(*c*)	29.3(*t*) 5.2(*c*)	5.5(*t*) 23.8(*c*)	11.2(*t*)
L_2L_4	55.0(*t*)	0(*t*) 10.0(*c*)	55.0(*t*)	0 (*t*) 13.2(*c*)	22.0(*t*)
U_0U_1	0	9.3(*c*) 15.5(*t*)	9.3(*c*) 15.5(*t*)	17.9(*c*) 22.0(*t*)	0
U_1U_3	46.0(*c*)	2.8(*c*) 8.6(*t*)	48.8(*c*)	7.5(*c*) 11.6(*t*)	18.4(*c*)
U_3U_4	56.5(*c*)	0(*c*) 2.4(*t*)	56.5(*c*)	0 (*c*) 1.6(*t*)	22.6(*c*)

In our design it is assumed as improbable that the maximum crane thrust would occur at the same time as the maximum wind. The specifications permit an increase of one-third in the unit stresses when wind is combined with other loads; therefore, if the wind stress in any member is less than one-third the sum of the dead and live load stresses, the wind may be disregarded. It is seen from the stress table that, for this building, the wind will need to be considered in only a few members.

Design of Truss Members. The tension members will be designed first. All members will be composed of two angles back to back. Although the elastic stability of a tension member is not in doubt, it is considered good practice to limit the L/r ratio of unsupported length to least radius of gyration, to a maximum value of 200. All gusset plates will be assumed to be ⅜ in. thick, thus making the distance back to back of angles ⅜ in.

When selecting tension members it is necessary to deduct the rivet holes from the cross section in order to obtain the effective net area of the member. The number of holes to deduct at the critical section will depend upon the make up of the member, the arrangement

of details, spacing of rivets, and the splicing adopted. In the two-angle type of member it is usually possible to detail all joints so that not more than one hole per angle need be deducted. Lateral plates for connecting the bottom lateral system to the lower chords are usually attached to the outstanding legs of the chord angles. If detailed properly, the one-hole deduction from each angle may be maintained.

For the *lower chord* the same section will be used throughout the truss. The maximum stress is 55,000 lb, and the allowed unit stress on the net section is 20,000 lb per sq in.

$$\text{Net area required} = \frac{55{,}000}{20{,}000} = 2.75 \text{ sq in.}$$

Use 2 ∟ 4 in. × 3 in. × ¼ in.

$$\text{Area} = 2 \times 1.69 - 2 \times \tfrac{7}{8} \times \tfrac{1}{4} = 2.94 \text{ sq in.}$$

¾-in. rivets are assumed. Least radius of gyration is 1.28 (4-in. legs vertical).

$$\frac{L}{r} = \frac{7.5 \times 12}{1.28} = 70$$

From the stress table it will be noticed that for L_0L_2 there is a reversal of stress of $23.8 - 11.2 = 12.6(c)$ when the wind is considered. The allowed unit compressive stress on the member just designed is $1\tfrac{1}{3} \times 14{,}625 = 19{,}500$ lb per sq in. The capacity of the member is $19.5 \times 3.38 = 65.9$ kips, which is adequate.

Diagonal U_1L_2

$$\text{Net area required} = \frac{32{,}700}{20{,}000} = 1.64 \text{ sq in.}$$

Use 2 ∟ 2½ in. × 2 in. × ¼ in.

$$\text{Area} = 2 \times 1.06 - 2 \times \tfrac{7}{8} \times \tfrac{1}{4} = 1.68 \text{ sq in. net}$$

Least radius of gyration is 0.78 in. (2½-in. legs vertical).

$$\frac{L}{r} = \frac{11.62 \times 12}{0.78} = 179$$

Diagonal U_3L_4. Smaller angles than 2½ in. × 2 in. × ¼ in. will not be used. The tension in U_3L_4 is less than that for U_1L_2 just designed, but there is a reversal of stress due to wind of $7.0 - 1.0 = 6.0$ kips (c). For 2 ∟ 2½ in. × 2 in. × ¼ in., $L/r = \dfrac{12.2 \times 12}{0.78} = 188$. The allowed

compressive unit stress is $1\frac{1}{3} \times 6070 = 8090$ lb per sq in. The capacity of the member is $8.09 \times 2.12 = 17.1$ kips, which is adequate.

Compression Members. According to the specifications the allowed unit stress in compression is $17{,}000 - 0.485(L/r)^2$ for values of L/r less than 120. For main compression members the value of L/r must not exceed 120.

For the *top chord* the same section will be used throughout. The maximum stress is 56,500 lb. Assuming that the purlins support the chord laterally at every panel point, the unsupported length is 7.51 ft. In many instances the type of roof covering or longer panel lengths may require intermediate purlins resting directly on the chord. In that case the chord must be designed for bending as well as the direct compression.

Estimating that L/r will be about 80 for a trial value, the allowed unit stress will be about 13,900 lb per sq in. and the approximate required

$$\text{area} = \frac{56{,}500}{13{,}900} = 4.06 \text{ sq in.} \quad \text{Try } 2 \llcorner 4 \text{ in.} \times 3 \text{ in.} \times \tfrac{5}{16} \text{ in.}$$

$$\text{Area} = 4.18 \text{ sq in.} \quad \text{Least } r = 1.27 \text{ in. (4-in. legs vert.)}$$

$$\frac{L}{r} = \frac{7.51 \times 12}{1.27} = 71 \quad \text{Allowed unit stress} = 14{,}550 \text{ psi}$$

$$\text{Actual required area} = \frac{56{,}500}{14{,}550} = 3.88 \text{ sq in.} \quad \text{(The size chosen is safe.)}$$

Diagonal L_0U_1.

$$\text{Maximum stress} = 49{,}000 \text{ lb compression}$$

$$\text{Length} = 11.62 \text{ ft}$$

$$\text{Least allowable } r = \frac{11.62 \times 12}{120} = 1.16 \text{ in.}$$

Try $2 \llcorner 4$ in. $\times$ 3 in. $\times \frac{3}{8}$ in.

$$\text{Least } r = 1.26 \text{ in.} \quad \text{Area} = 4.96 \text{ sq in.}$$

$$\frac{L}{r} = \frac{11.62 \times 12}{1.26} = 111 \quad \text{Allowed unit stress} = 11{,}025 \text{ psi}$$

$$\text{Required area} = \frac{49{,}000}{11{,}025} = 4.45 \text{ sq in.} \quad \text{(The member is safe.)}$$

Diagonal L_2U_3.

$$\text{Maximum stress} = 20{,}000 \text{ lb compression}$$

$$\text{Length} = 12.2 \text{ ft}$$

$$\text{Least allowable } r = \frac{12.2 \times 12}{120} = 1.22 \text{ in.}$$

Use 2 ∟s 4 in. × 3 in. × ¼ in.

$$\text{Least } r = 1.28 \text{ in.} \quad \text{Area} = 3.38 \text{ sq in.}$$

$$\text{Safe capacity} = 3.38 \times 10{,}590 = 35{,}600 \text{ lb, which is adequate}$$

Compression Verticals.

$$\text{Maximum stress} = 9380 \text{ lb compression}$$

$$\text{Least allowed } r = \frac{9.25 \times 12}{120} = 0.92 \text{ in.}$$

Try 2 ∟s 3 in. × 2½ in. × ¼ in.

$$\text{Least } r = 0.95 \text{ in. (3-in. legs together)} \quad \text{Area} = 2.62 \text{ sq in.}$$

$$\frac{L}{r} = \frac{9.25 \times 12}{0.95} = 117 \quad \text{Allowed unit stress} = 10{,}360 \text{ psi}$$

$$\text{Safe capacity} = 2.62 \times 10{,}360 = 27{,}140 \text{ lb (adequate)}$$

The other verticals do not carry a computed stress and will be made of 2 ∟s 2½ in. × 2 in. × ¼ in.

91. Structural Details. Figure 144 indicates the column and base details for riveted construction. The girder design of Art. 85 differs from Fig. 144 in that the channel on the crane girder was used on the top of the girder rather than as shown. The column diaphragms are usually made of 5/16-in. plate. They might be sections of I-beams

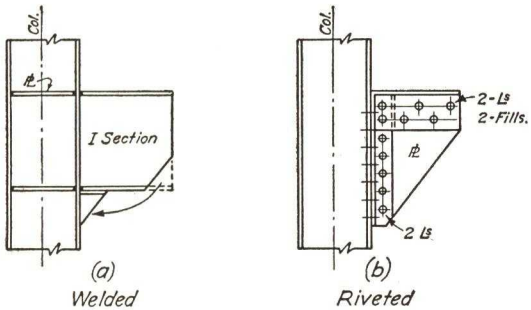

Fig. 148

properly shimmed to fit into the required space. Figure 145 shows details that may be used for an all-welded design. This figure contrasts the details of riveted and welded step-back columns. This type of column eliminates the diaphragms of the other column type, but adds to the complexity of design, since the lower column section is subject to large bending moments. The line of action of the crane girder load and the load from the roof transferred through the upper column section are eccentric with respect to the lower column section.

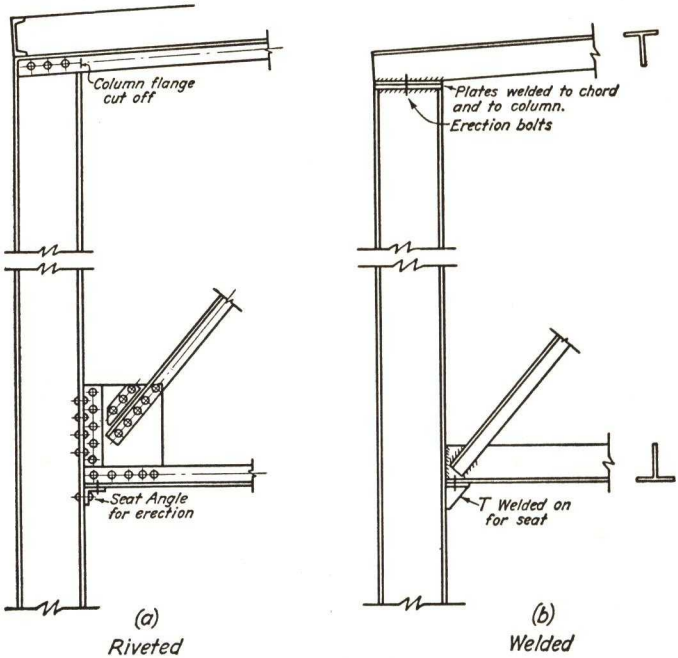

Fig. 149
Truss to Column Connections

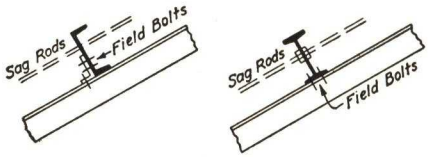

(a)
Field Bolted

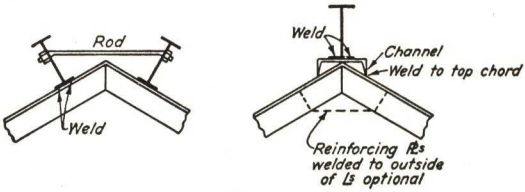

(b)
Field Welded

Fig. 150
Typical Purlin Connections

Figure 148 shows a detail that can be used to support light crane loadings. A welded and a riveted bracket are shown. Note that there will be tension on the column to bracket rivets of the riveted design. The column will be subject to bending moment, depending upon the amount and eccentricity of the applied load.

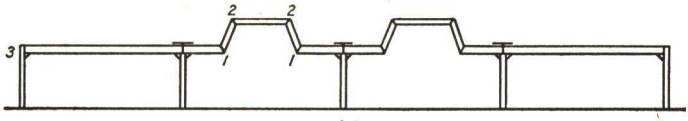

(a)
Transverse framing with rigidly framed monitors

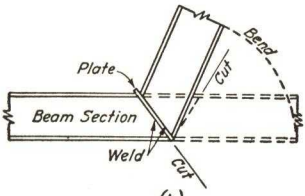

(b)
Detail at corner 1 and 2

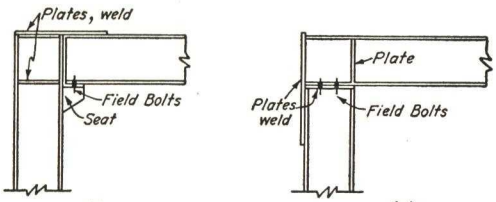

(c) *Detail at Joint 3* (d) *Alternate Detail at Joint 3*

Fig. 151
Welded Frame and Typical Details

Figure 149(*a*) shows the details for framing a riveted truss to the column, and Fig. 149(*b*) shows details for a similar connection in an all-welded design. It is to be noted that the welded design does not need large gusset plates. The chords of the welded design are shown as T sections. These are usually obtained by splitting a wide-flanged I-beam.

Figures 150(*a*) and (*b*) indicate typical purlin to chord connections. Sag rods are shown. They are usually ⅝-in. round rods, spaced 6 ft to 10 ft apart.

Figures 151 and 152 show typical details of welded rigid frames

which utilize standard sections to their best advantage. A complete welded assembly is limited to the size that may be readily shipped and handled on the job. Due consideration must be given to the erection scheme by providing temporary bolted connections. Several alternate arrangements for field splices are suggested in Fig. 152. It

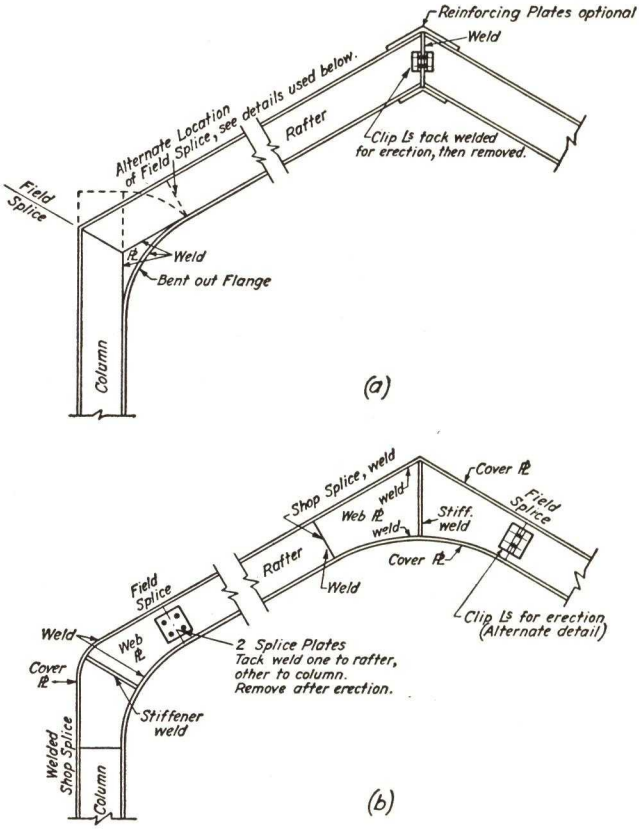

Fig. 152
Typical Details With Sloping Rafters
"Welded Design"

is to be noted that a radial stiffener is provided at the curved knees in Fig. 152 (*b*). This gives stability to the compression flange, preventing buckling of the outstanding legs of the flange. In large knees more than one pair of these stiffener plates should be provided. A good way to locate these stiffeners is to make a celluloid model of the knee, first loading it without stiffeners and noting where the first

TYPICAL DETAILS

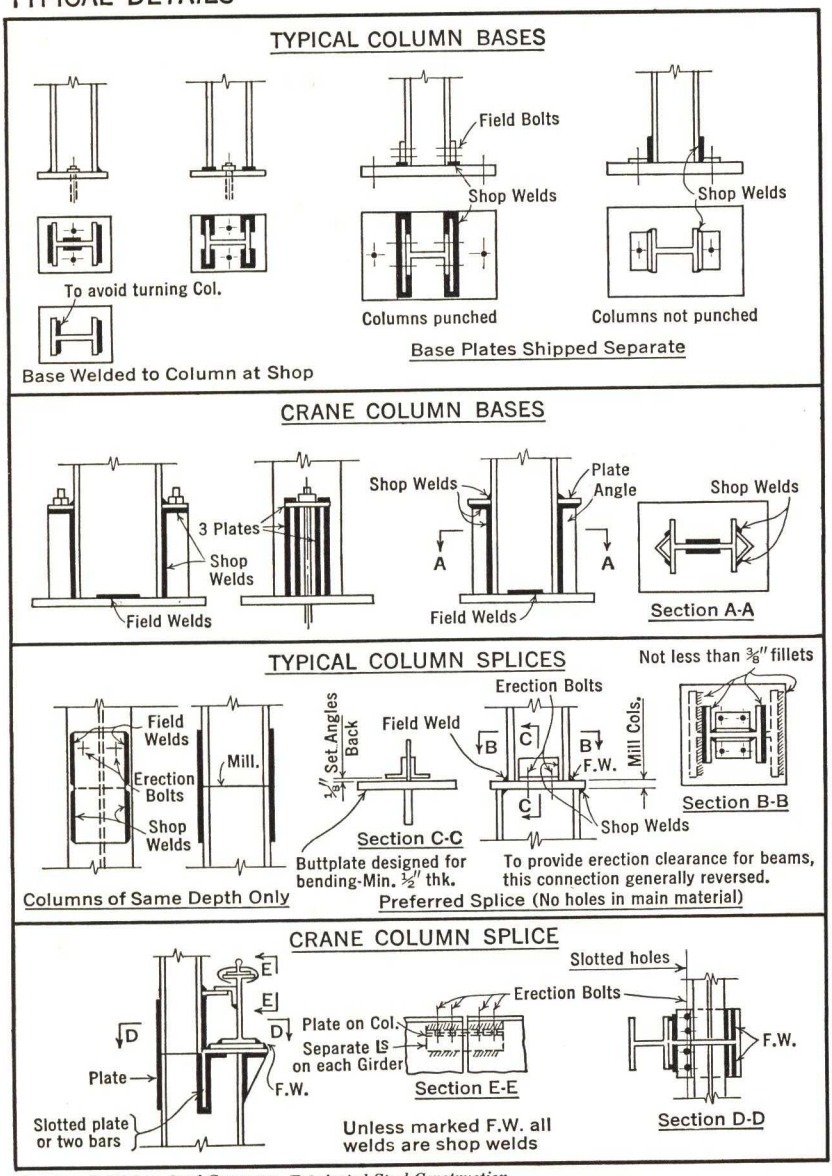

Courtesy Bethlehem Steel Company—Fabricated Steel Construction

Fig. 153.

TYPICAL DETAILS

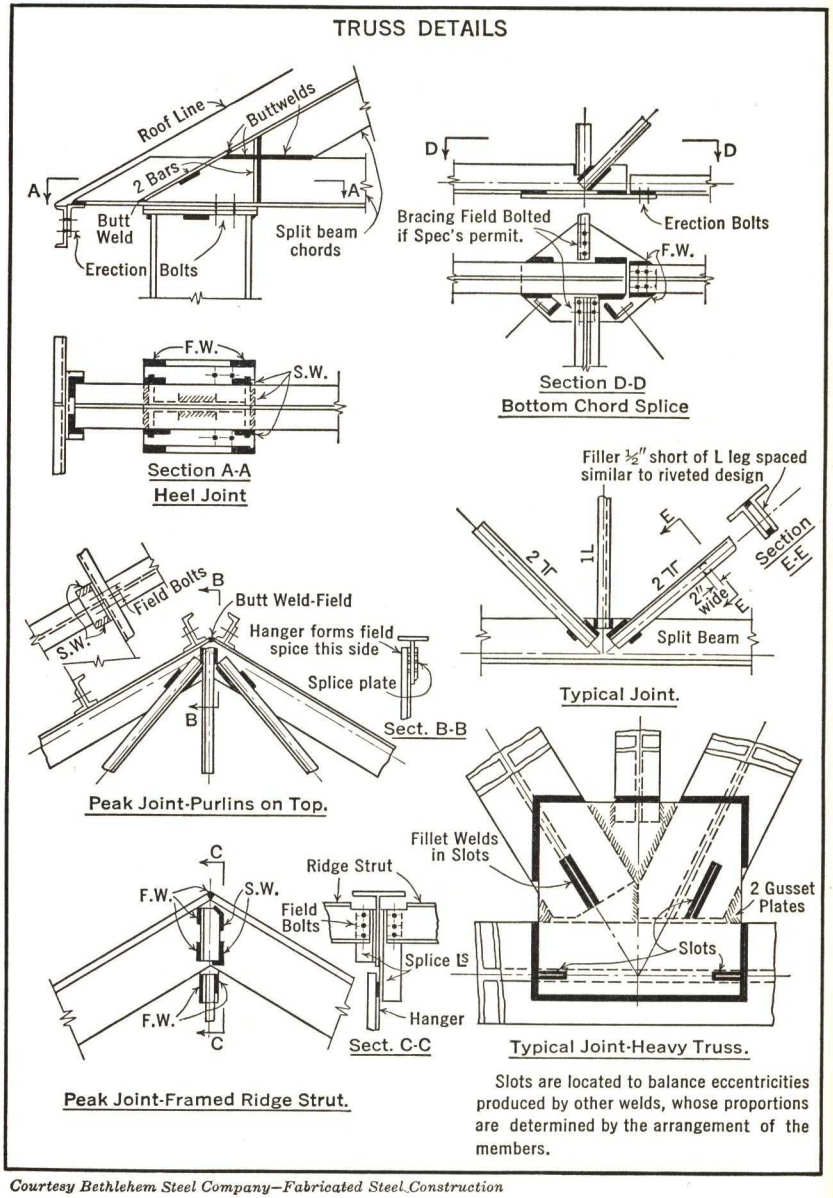

Courtesy Bethlehem Steel Company—Fabricated Steel Construction

Fig. 154.

buckling occurs; then placing a stiffener at that point and continuing the loading until a second buckling occurs; and placing a second stiffener at that point, continuing this until all stiffeners are located.

TYPICAL DETAILS OF CRANE COLUMN BASES

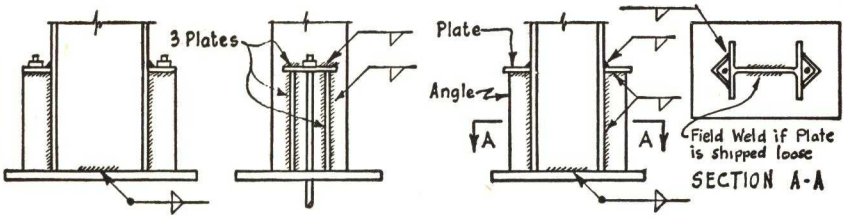

TYPICAL DETAILS OF CRANE COLUMN SPLICES

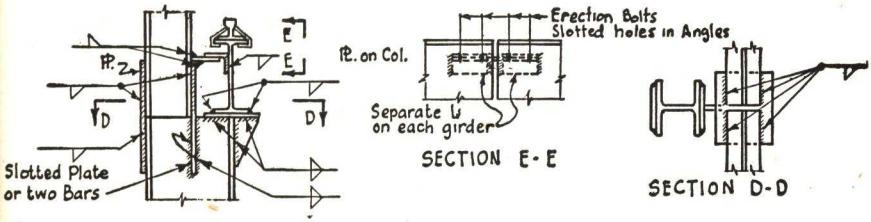

Courtesy of American Institute of Steel Construction.

Fig. 155.

Figures 153 and 154 indicate other typical details for welded design. They have been furnished through the courtesy of the Bethlehem Steel Company.

CHAPTER XI

WELDED DESIGN

Structural welding has increased in importance and usage during the last decade, and it is recognized that welding will prove to be more economical than riveted construction in many instances. The economy of welded design often would be more clearly indicated if the structural engineer would depart from his practice of adopting conventional riveted details and section makeup for his welded design. Welding permits the exercise of a great deal of ingenuity in the development of details. Certain advantages of welding over riveting are quite evident, such as the preservation of the cross-sectional area of tension members, simplification of details, and the development of continuity.

92. Types of Welds. In electric arc welding the electrodes or rods should conform to the requirements of the American Welding Society Specifications for Iron and Steel Arc Welding Electrodes. These rods are usually specified by classification numbers and should be suitable for the positions in which they are used. They are usually spoken of as coated rods. The merits of the coated rod over the bare rod are well known.*

The permissible unit stresses for welds made from the approved type of filler metal are:

Shear on section through throat of fillet weld, or on faying surface area of filled plug or slot weld	= 13,600 psi
Tension on section through throat of butt weld	= 16,000 psi
Compression on section through throat of butt weld	= 20,000 psi
Shear on section through throat of butt weld	= 13,000 psi

Figures 156(*a*) and (*b*) indicate the fillet weld in two forms, the isosceles type, Fig. 156(*a*), being the commoner. The strength of both welds in shear depends upon the area of the throat section. In fillet welds the size of the weld D is usually measured to the nearest

* See Section 3(*d*) of the tentative specification of the American Institute of Steel Construction. "Specification for the Design, Fabrication and Erection of Structural Steel for Buildings by Arc and Gas Welding," January, 1942.

$\frac{1}{16}$ in. The strength of a fillet weld in shear is usually spoken of as so many pounds per lineal inch of weld and is arrived at as follows. The area of the throat cross section per lineal inch is $0.707 \times D$, and for a coated electrode the allowable shearing strength per lineal inch is $0.707 \times D \times 13{,}600 = 9600 \times D$. A designer commonly remembers this as being 1200 lb per lineal in. for every $\frac{1}{8}$ in. of the leg of the weld.

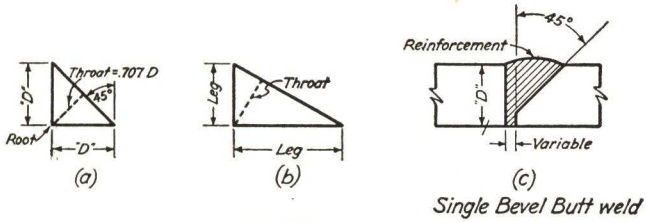

Fig. 156

The strength of a butt weld is also based upon the throat dimension, D, Fig. 156(c). The allowable unit stress in tension or compression is applied to the effective throat area.

A type of weld receiving an increasing use is the plug weld. As its name implies, it is a plug of weld metal placed in a punched or drilled hole. The effective area of the weld is the contact area, the area of the hole. In effect, then, the plug weld acts as a rivet in single shear.

93. Minimum Welds. Welds are often used to connect material when no stress computations are involved. If the weld size with respect to the thickness of the welded material is too small, the welds may crack due to the rapid cooling effect of the adjacent material. Good practice has established the minimum weld sizes for different thicknesses of material. They are given in the following table:*

Size of Fillet Weld, Inches	*Maximum Thickness of Part, Inches*
$\frac{3}{16}$	$\frac{1}{2}$
$\frac{1}{4}$	$\frac{3}{4}$
$\frac{5}{16}$	$1\frac{1}{4}$
$\frac{3}{8}$	2
$\frac{1}{2}$	6
$\frac{5}{8}$	Over 6

According to Section 18(d) of the A.I.S.C. Tentative 1942 Specifications:

* See Section 18(c), A.I.S.C. Tentative Specifications, 1942.

> The maximum nominal size of fillet weld supplied to a nominally square edge of a plate or section shall be 1/16 inch less than the nominal thickness of the edge, and the nominal size of fillet weld used along the toe of an angle or the rounded edge of a flange shall not exceed three-fourths the nominal thickness of the angle leg or three-fourths the nominal edge thickness of the flange; except that when required by the design conditions and specially designated on the drawings, fillet welds equal in size to the edge of a plate or rolled section may be used, provided that the weld is built out in such a manner as to insure full throat thickness, full fusion area, and no injury to the base metal that will reduce its thickness adjacent to the weld.

Intermittent welds are often used, but the minimum length of each weld should be at least four times the weld size, with a minimum of 1½ in. The welder will normally allow an additional length sufficient to allow for craters. If the spacing of the intermittent welds is not too great, a welder may be able to hold the arc by skipping from weld to weld.

A common fault of designers is to specify a weld size that may be too large for the thickness of the flange of beams or angles. It is advisable that the mill catalogs be referred to in selecting the sizes to be used.

94. Economy in Welding.* In general, it is difficult to state whether riveting or welding will prove to be more economical, but many of the minor details of a riveted structure may be shop-welded to advantage. In the opinion of those closely connected with the fabricating fields generally, shop-riveted, field-welded, or shop-welded, field-riveted structures are not economical since neither process is used to its best advantage. Shop riveting as stated before may be combined with shop welding to some advantage, but usually the combination of field welding and field riveting is not advantageous.

One of the first considerations in the selection of details is the elimination of shop operations. When it is practicable, holes should be eliminated in the main material; however, if holes must be used in a member, welding should be avoided for that member. The details usually can be arranged so that some pieces are plain for field welding, others punched to receive temporary field bolts before field welding. The detail material going on to a main member may require holes with a final shop welding operation of the detail to the member.

For beam and column work it will be economical to shop-weld all the details to the columns and punch holes in the beams and girders for the erection bolts. The field welding can be kept to a minimum by welding only the column splices and the top and bottom seat angles.

* As suggested in *Design Data for Electric Welding,* by Bethlehem Steel Company, unpublished.

For light mill buildings, the columns, trusses, and crane girders should be welded with no punching operations. The purlins, girts, and bracing are bolted in the field.

While the ultimate in application of welding would eliminate all holes it is to be kept in mind that the structure must be erected, plumbed into position, and held there while the field welding progresses. Erection bolts will normally be used and, since the cost of removing these bolts exceeds the value of the bolts, they usually remain in the structure. The details should be planned so as to prevent these bolts from interfering with the action of the joint.

Some economy may be realized by a proper choice of weld size, since in general the volume of weld metal increases as the square of the weld size while the strength increases only directly with the weld size. If a smaller weld of greater length is used, the economy in weld metal may be offset by an increase in length and weight of the detail material. Each problem is an individual consideration. The smaller weld sizes are more easily made since welds below ⅜ in. can be made in one pass of the electrode.

In welded construction it is uneconomical to transfer a stress through fillers, or across two or more planes, as the transfer calls for a weld at each plane. In riveted construction a rivet will transfer shear at each shearing plane crossed.

Welding is cheapest when placed in a flat or downwelding position. Overhead welding should be avoided whenever possible.

95. Welds Resisting Parallel Shear. Figure 157 indicates a tension splice, or double lap joint. The total tension P is to be carried by four fillet welds of size D which are each L inches long. It is known that at working loads the distribution of shear to each weld will not be uniform. The extreme ends of the fillet welds will take more shear per unit length than the welds in the center. It is also true that before an overall failure of the weld can take place, provided the weld material is ductile, all parts of the weld must be stressed alike. The common practice in design is to consider the stress uniformly distributed, and this practice is supported by tests which have shown that the ultimate strength is directly proportional to the length and size of the weld.

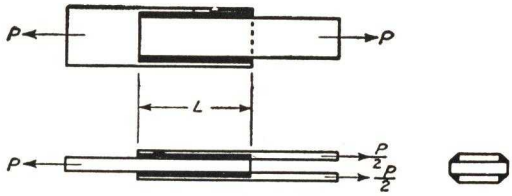

Fig. 157

The shear stress per unit length of the welds shown in Fig. 157 equals

$P/4L$. In symbol form we may call this shear stress s_s. As discussed before, the minimum section carrying this unit shearing force may be considered to be the throat section of the weld. It has also been shown that the allowable shear per lineal inch of weld is $9600D$, where D is the weld size in inches. For example, suppose that in Fig. 157, L = 6 in. and D = ⅜ in., and that the maximum allowable value of P is desired. The allowable load per inch of weld will be $9600 \times \frac{3}{8}$ = 3600 lb.

$$P = 4 \times 6 \times 3600 = 86{,}400 \text{ lb}$$

The converse of this problem would be to have P and L known, with D to be determined, or P and D known, with L to be determined.

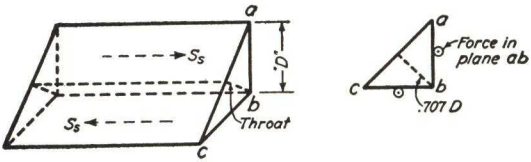

Fig. 158

Figure 158 represents one lineal inch of weld taken from the splice of Fig. 157, with the shearing forces shown in the planes of the legs. It is evident that the free body is not in equilibrium and that moment equilibrium must be obtained by resisting moments acting in reference

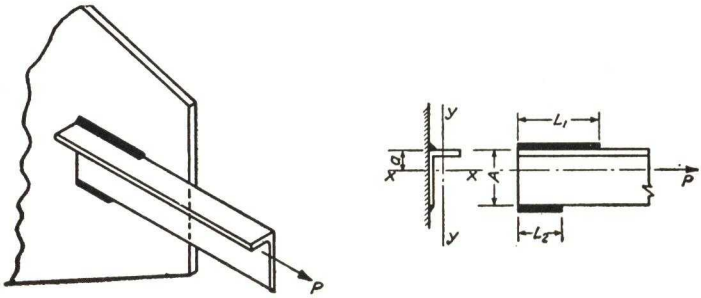

Fig. 159

to the plane abc and possibly in the plane of the legs. The writers do not know of any analysis which takes these secondary effects into account. Safe weld stresses are based upon tests of similar splices, and these secondary effects were integrated by the tests.

Another case of fillet welds resisting shear caused by tension or compression is shown in Fig. 159. The fillet welds of length L_1 and L_2

are to be of such a length that bending is prevented in the angle and thus a " balanced " design for the welds is achieved. The distance a, measured from the back of the angle to its center of gravity, locates the line of action of the total stress in the angle. If the safe allowable weld shear per lineal inch is s_s, then $L_1 + L_2 = P/s_s$. The length of L_1 and L_2 may be found by taking moments about the top and bottom of the angle; thus

$$L_1 = \frac{P(A - a)}{s_s A} \quad \text{and} \quad L_2 = \frac{Pa}{s_s A}$$

See Chart No. 1 at the end of this chapter. Eccentricity about the Y axis has been neglected, but tests have indicated that in the case of single angle members this eccentricity causes bending in both the angle and the weld. The A.I.S.C. Welding Specifications provide for this bending in the single angle member by requiring that the effective area of the angle in tension should be taken as the net area of the connected leg plus 50% of the area of the unconnected leg. Double-angle members are always preferable. If, however, the single-angle member is flattened at the ends, some of the objections to its use are removed since the eccentricity is reduced in a plane normal to the welds.

Recent tests by Gibson and Wake,* on angle tension members, indicate that the conventional " balancing " of the working strength of the welds about the projection of the center of gravity of the angle is not essential for providing adequate connections. The tests were made on members connected by " balanced " and " unbalanced " welding. For single-angle tension members the ultimate strength of the " balanced " connection was about 3% greater than for the " unbalanced " connection. For double-angle tension members the two types tested alike.

96. End Welds.† The joint of Fig. 160(a) combines end fillet welds with side fillet welds. It is probably true that the end welds at working loads will tend to resist more than their share of the total load; however, common design practice considers these welds stressed the same as side welds, although the throat is stressed in tension instead of shear. Hence, if the weld size is D and we assume $9600D$ lb per in. as the allowable design value, the welds of Fig. 160(a) are good for

$$P = 2(2L + L_1)9600D$$

* G. J. Gibson and B. T. Wake, "An Investigation of Welded Connections for Angle Tension Members," *J. Am. Welding Soc.*, Vol. 21, January, 1942.

† William W. Stecker, " Effect of Eccentricity on the Strength of Welded Joints," *J. Am. Welding Soc.*, Vol. 17, November, 1938. Also " Static Tests of Fillet and Plug Welds," a review of literature from 1932 to 1940, by W. Spraragen and G. E. Claussen, *J. Am. Welding Soc.*, Vol. 21, April, 1942.

The use of end welds should, in general, be such as to avoid bending on the weld, as will be the case in the joint illustrated in Fig. 160(*b*). The prying effect will establish a concentration of stress at the root of

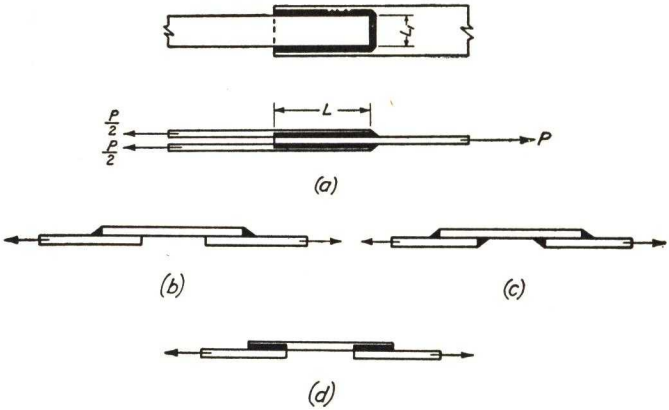

Fig. 160

weld. Figures 160(*c*) and (*d*) represent better practice if this type of joint cannot be avoided as the bending is reduced to a minimum.

Good design practice calls for the elimination of eccentricity wherever possible. The assumption of uniform stress distribution over the throat of the weld does not hold for cases of eccentric loading.

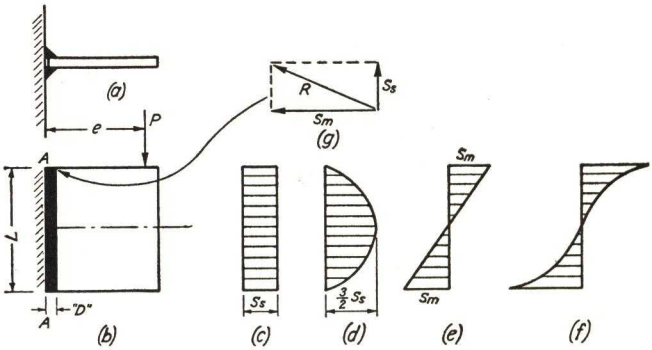

Fig. 161

97. Welded Connections Subjected to Shear and Bending. Figures 161 (*a*) and (*b*) indicate a plate supporting an eccentric load P with the plate fillet-welded to the face of the column. Although other essential structural features have not been shown, the simplicity of the problem

makes it ideal for this discussion. It is clear that the total vertical shear to be resisted by the vertical welds must be equal to P, and that the welds must develop a safe resisting moment of Pe. In this case, as well as for the other cases discussed, little is known about the actual distribution of shear and bending stresses on the plane A–A, and the stresses existing in the weld are highly indeterminate. Modern practice, or at least common practice, appears to favor the computation of a resultant stress arrived at by various methods, the allowable maximum resultant stress being limited to $9600D$, no matter what direction the resultant stress may have. Although this may appear to have a questionable background, advocates of this procedure believe that it correlates well with tests. Many designers compute the maximum principal stress acting on the weld by combining shear and normal stresses.

In the analysis of the welds, common practice considers the shear uniformly distributed as indicated in Fig. 161(*c*). However, Fig. 161(*d*) shows the distribution of shear as called for by the common beam theory, and Fig. 161(*e*) indicates the commonly accepted variation of bending stress. It is highly improbable, according to Shedd* and others, that elementary beam formulas are correct when applied to a section at an abrupt change in cross section. It is more likely true that the bending stress in the outside fiber is far greater than that given by $s = Mc/I$, with the unit stress variation being somewhat as shown in Fig. 161(*f*). This concentration of bending stress in the extreme fibers will be compensated for by the assumption of a uniform distribution of shear which gives a greater shearing unit stress on the extreme fiber than the actual. Therefore, the commonly used assumptions as to bending and shearing stresses are probably safe.

The maximum bending stress in the welds is usually computed without modification by using the equation $s_m = Mc/I$. In computing the moment of inertia of the vertical lines of welds, assume that the weld size D is equal to unity, then s_m will be computed as pounds per lineal inch of fillet weld. This is convenient in designing since the weld size is probably unknown at the start of the analysis.

$$\text{For one line of weld, } I = \frac{1 \times L^3}{12}$$

$$\text{For two lines of weld, } I = \frac{L^3}{6}$$

* *Structural Design in Steel,* by T. C. Shedd, John Wiley and Sons, p. 490.

Then

$$s_m = \frac{Mc}{I} = \frac{Pe\frac{L}{2}}{\frac{L^3}{6}} = \frac{3Pe}{L^2} \quad \text{where two lines of weld are assumed,}$$

$$\text{and } s_m = \frac{6Pe}{L^2} \quad \text{where one line of weld is assumed.}$$

The computation of the shearing stress per lineal inch is:

$$\text{For one line of weld, } s_s = \frac{P}{L}$$

$$\text{For two lines of weld, } s_s = \frac{P}{2L}$$

The next step in the analysis is to find the resultant stress on the most extreme portion of the weld by combining s_s and s_m. In the case at hand these two stresses act at right angles, and their resultant may be found graphically, as in Fig. 161(*g*), or by $s = \sqrt{s_s^2 + s_m^2}$.

For one line of weld the resultant stress may be found as follows:

$$s = \sqrt{\left(\frac{P}{L}\right)^2 + \left(\frac{6Pe}{L^2}\right)^2} = \frac{P}{L}\sqrt{1 + \left(\frac{6e}{L}\right)^2}$$

For two lines of weld,

$$s = \frac{P}{2L}\sqrt{1 + \left(\frac{6e}{L}\right)^2}$$

The usual practice is to limit the resultant stress to $9600D$ lb per lineal in. or $9.6D$ kips per lineal in., which is based upon the throat dimension of the weld. The allowable load P in kips can be shown to equal the following:

$$\text{For one line of weld, } P = \frac{9.6LD}{\sqrt{1 + \left(\frac{6e}{L}\right)^2}}$$

$$\text{For two lines of weld, } P = \frac{19.2LD}{\sqrt{1 + \left(\frac{6e}{L}\right)^2}}$$

This problem may be solved graphically by Charts Nos. 2 and 3 at the end of this chapter.

A transverse fillet weld connection subjected to shear and bending moment is shown in Fig. 162. The shearing stress, s_s, may be computed by distributing the shear uniformly, or s_s equals $P/2L$. The weld stress due to bending may be computed by assuming the resisting moment equal to $Q(D + d)$, where Q equals $s_m L$. Thus,

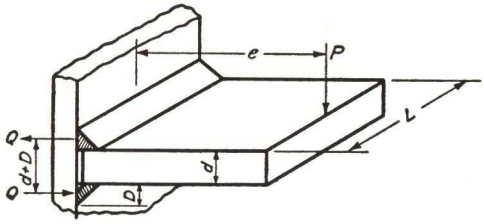

Fig. 162

$$s_m = \frac{Pe}{L(D + d)}$$

The resultant of the shearing and bending stress is $s = \sqrt{s_s^2 + s_m^2}$. This resultant in pounds per lineal inch of weld is commonly assumed to be limited by the allowable shearing stress on the throat cross section, or limited to $9600D$ lb per lineal in.

98. Combined Direct Shear and Torsional Shear. The eccentric loading of a joint to produce torsion on the group of welds is as common as the similar riveted type of connection. Let Fig. 163 represent the

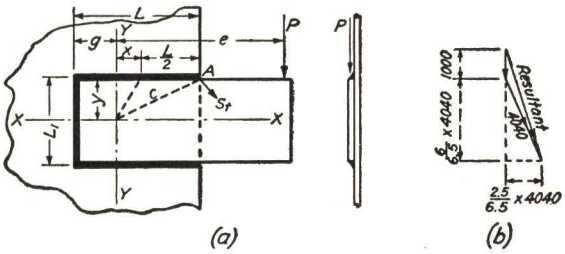

Fig. 163

typical condition, greatly simplified in its detail for purposes of discussion. An analysis of the weld group usually assumes the vertical shear distributed equally to each lineal inch of weld; thus the vertical shear intensity will be $P/(L_1 + 2L)$. The computation of shear due to torsion will follow from Tc/J, the general torsion formula, where $T = Pe$, and J is the polar moment of inertia about an axis through the center of gravity of the welds.

The notation is shown in Fig. 163. The X and Y axes pass through the center of gravity of the weld group, and in reference to this pair of axes the coordinates of the center of gravity of the top weld are x and

y. To compute J it is recalled that $J = I_x + I_y$; and again, working in terms of a weld size equal to unity,

$$\text{For the top weld only,} \quad I_x = I_0 + Ad^2 = Ly^2$$

$$I_y = I_0 + Ad^2 = \frac{L^3}{12} + Lx^2$$

or

$$J = \frac{L^3}{12} + L(x^2 + y^2) = L\left(\frac{L^2}{12} + x^2 + y^2\right)$$

The same procedure is true for all other welds; hence the total J for all lines of welding is $\sum L(L^2/12 + x^2 + y^2)$.

The torsional unit shear at any point, s_t, may be computed using the torsion formula $s_t = Tc/J$, where c is the radial distance from the center of gravity to the particular point in question. Then s_t must be combined with s_s for resultant stress, remembering that s_t acts normal to a radius drawn from the center of gravity of the group to the point in question. Caution must be exercised in making this combination, since at some point and for some cases the vertical shearing stress and the torsional stress may add directly, giving a larger stress than the resultant at the most remote portion of the weld.

The method will be illustrated by several examples.

Example 1. In Fig. 163(*a*), let $L = 10$ in., $L_1 = 5$ in., and $g + e = 14$ in. $P = 25{,}000$ lb. The first step is to locate the center of gravity of the welds.

$$g = \frac{2 \times 5 \times 10}{25} = 4 \text{ in.}$$

The next step is to compute the polar moment of inertia from the general expression just developed.

$$J = 2 \times 10\left(\frac{100}{12} + 1 + (2.5)^2\right) + 5(25/12 + 4^2 + 0) = 402.0 \text{ in.}^4$$

$$s_t = \frac{10 \times 25{,}000 \times \sqrt{6^2 + 2.5^2}}{402.0} = 4040 \text{ lb per lineal in.}$$

$$s_s = \frac{25{,}000}{25} = 1000 \text{ lb per lineal in.}$$

For the maximum stress, these two stresses must be combined. The torsional stress s_t acts normal to the radius from the center of gravity to the corner A. The shearing stress s_s is parallel to the load P. Figure 163(*b*) shows these combined graphically. The components may be figured algebraically, and the resultant computed. From Fig. 163(*b*), the resultant stress is

$$s = \sqrt{4730^2 + 1550^2} = 4980 \text{ lb per lineal in.}$$

The required weld size is $\frac{4980}{9600} = 0.52$ in. Use $\frac{9}{16}$-in. fillet welds.

Appended to this chapter is a chart by which the same problem may be solved graphically. The value of D is the same as computed above.

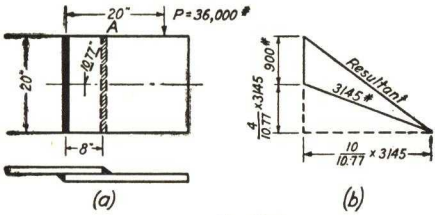

Fig. 164

Example 2. Figure 164(a) shows a lap joint with two fillet welds, carrying an eccentric cantilever load. The center of gravity of the welds is located by inspection. From the general expression, the polar moment of inertia is

$$J = 2 \times 20\left(\frac{20^2}{12} + 4^2 + 0\right) = 1973 \text{ in.}^4$$

$$s_t = \frac{16 \times 36{,}000\sqrt{10^2 + 4^2}}{1973} = \mathbf{3145} \text{ lb per lin in.}$$

$$s_s = \frac{36{,}000}{40} = 900 \text{ lb per lin in.}$$

These are shown combined, graphically, in Fig. 164(b). The maximum resultant stress is 3580 lb per in., and the required fillet size is $D = \frac{3580}{9600} = 0.373$ in. Use ⅜-in. fillet welds. This problem is solved graphically on Chart 5 at the end of this chapter.

99. Seat Angle Design. The single-seat angle, welded or riveted, is common in a majority of beam-to-column connections.* Figure 165(a) indicates the usual details in welded designs. In this discussion, the top clip angle will be considered to offer no appreciable restraint; a common size for this angle is 3½ in. × 3½ in. × ¼ in. or 4 in. × 4 in. × ¼ in. It is welded in the field as shown. While any connection of this type will offer some restraint, tests have shown that, for a top angle of the size indicated, not more than a 10% restraining moment can be developed. Test designs based upon obtaining full restraint by using a heavier angle usually failed in the welds.

The beam seat should be flexible enough to allow the beam to have an end slope in agreement with free-ended conditions. If the outstanding leg of the angle is too stiff, the beam would be supported on the toe of the angle. The desired condition is to have the leg of the angle

* Many engineers believe that the single-seat angle should not be used for reactions over 35 to 40 kips.

bend until it slopes approximately the same as the end of the beam. If the seat angle is too flexible, the bearing of the beam on the angle will become so short that the web stresses in the beam will approach the crippling stress. The design then must include the following: (1) the determination of the bearing length of the beam on the seat, (2) design of the angle for safe bending stresses, and (3) the design of the welds.

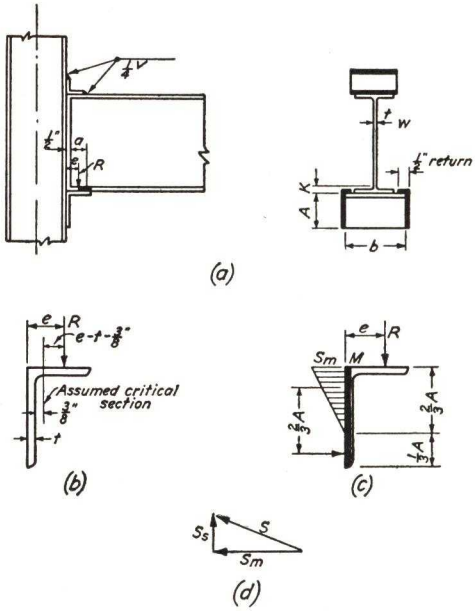

Fig. 165
Seat Angle Design

The specifications of the American Institute of Steel Construction state that the compression stress in the web of a beam at the toe of the fillet shall not exceed 24,000 lb per sq in.* By this specification, a, the required length of bearing in inches, should be equal to $\frac{R}{24{,}000t_w} - k$, where t_w is the thickness of the web of the beam in inches and k the distance from the outer face of flange to web toe of fillet in inches. In Fig. 165(b) the reaction R is assumed to act at the center of this bearing length a, and this determines the eccentricity e. The tests of Lyse and Schreiner† indicated that the critical section for bending stress in the angle occurred near the root of the fillet. Lawson‡ assumes that the critical section is ⅜ in. beyond the face of the seat angle. It will be taken as such in this article. Normally the clearance between the end of the beam and the face of the column varies from ¼ to ½ in. The effective moment arm for computing the bending stress in the leg of the angle is $e - t - \frac{3}{8}$ in.; or the allowable reaction in kips, allow-

* See *Am. Inst. Steel Construction Handbook,* 4th Ed., 1941, p. 180, or A.I.S.C. Specification, Art. 20(h).

† Lyse and Schreiner, "An Investigation of Welded Seat Angle Connections," *J. Am. Welding Soc.*, Vol. 14, February, 1935.

‡ Heath Lawson, "The Design of Welded Seat Angle Connections," *J. Am. Welding Soc.*, Vol. 14, June, 1935, p. 23.

ing 20 kips per sq in. in bending, will be $R = \dfrac{3.33bt^2}{e - t - \frac{3}{8}}$. From this the thickness of the angle, t, can be computed. Many designers will permit the unit bending stress to be 24,000 lb per sq in.

The next step in the analysis is to design the welds attaching the seat angle to the column. These vertical welds are subjected to a bending moment of Re and a vertical shear of R. The way in which these welds resist the bending moment and the action of the vertical leg of the angle in bending have not as yet been too successfully investigated and hence are controversial. It is complicated by the bending of the vertical leg of the angle between the two vertical lines of welds until the angle bears against the column. For example, the position of the neutral axis in bending in the vertical welds was reported by Lyse and Shreiner to be above the midheight of the vertical leg. However, the design method developed by Lawson assuming the neutral axis to be at one-third the height of the leg, measured from the bottom, has given good results practically and compares well with other design methods; hence it will be used here. Figure 165(c) indicates the distribution of bending stress assumed in the weld, maximum bending stress being indicated by s_m. Then

$$Re = \frac{s_m}{2} \times \tfrac{2}{3}A \times \tfrac{2}{3}A \times 2 \quad \text{or} \quad s_m = \frac{9Re}{4A^2} \quad \text{and} \quad s_s = \frac{R}{2A}.$$

The resultant stress in the weld equals

$$s = \sqrt{\left(\frac{R}{2A}\right)^2 + \left(\frac{9Re}{4A^2}\right)^2} = \frac{R}{2A}\sqrt{1 + \left(\frac{4.5e}{A}\right)^2}$$

With the weld stress known, the weld size may be selected. A return of the weld ½ in. along the top is usually added but not included in strength computations.

100. Design of Stiffened Seats. The stiffened seat, or the structural bracket, is used to support reactions too large for a single-seat angle. They take a variety of forms as shown in Fig. 166(a). The length of the outstanding portion should be at least equal to or greater than the minimum required bearing length as determined by web crippling of the beam. This will also depend on the end clearance between the beam and column.

The location of the point of application of the reaction to the seat depends on a, the minimum length of bearing as determined in Art. 99 and w. (See Fig. 166(b).) Since flexure has been largely removed

from the supporting seat, the reaction will be applied near the outer end of the bracket.

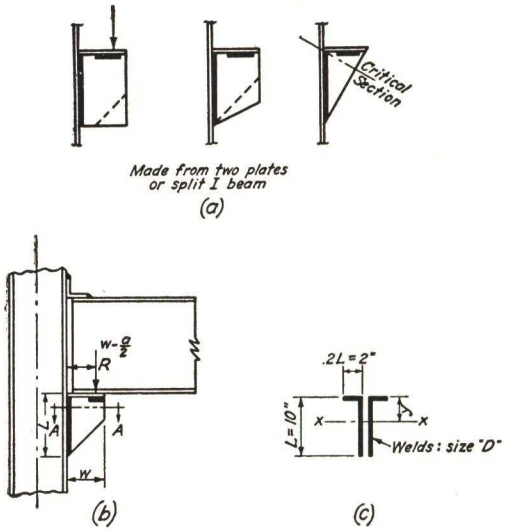

Fig. 166
Stiffened Seats

As an example, an analysis of this type of stiffened seat, using two plates, follows. Referring to Fig. 166(*b*), it is assumed that a 16″ WF 88# beam is to be supported, and that the maximum reaction is 40 kips.

DESIGN

$$\text{Beam web thickness} = 0.504 \text{ in.}$$

$$\text{Minimum bearing length } a = \frac{R}{24t_w} - k$$

$$= \frac{40}{24 \times 0.504} - 1.5 \text{ in.} = 1.8 \text{ in.}$$

With $w = 6$ in.,

$$e = 6 - 0.9 = 5.1 \text{ in.}$$

The supporting vertical plate is designed for shear and moment, although in this short supporting member, elementary theories are perhaps invalid.* Allowing 20,000 lb per sq in. in bending,

$$\frac{20 \times tL^2}{6} = 40 \times 5.1$$

* See extended discussion of "Welded Structural Brackets," by Cyril D. Jensen, *J. Am. Welding Soc.*, Vol. 15, October, 1936.

Assume t as $\frac{5}{8}$ in. (it should not be less than the web thickness). Then

$$L = \sqrt{\frac{40 \times 5.1 \times 6}{20 \times \frac{5}{8}}} = 9.8 \text{ in. (call 10 in.)}$$

This assumes that the top plate is not assisting in the resistance to bending. The maximum shearing stress in the plate is

$$\frac{3}{2} \times \frac{40}{\frac{5}{8} \times 10} = 9.6 \text{ kips per sq in.}$$

Jensen also advocates the computation of the maximum compression stress in the web plate on Section A–A of Fig. 166(b), by using $P/A + Mc/I$. This may be critical; however, this compressive stress may be permitted to be higher than usual without serious effects, because one edge of the plate is welded to the column. The theoretical computations are

$$s_c = \frac{40{,}000}{\frac{5}{8} \times 6} + \frac{40{,}000 \times 2.1 \times 6}{\frac{5}{8} \times 6^2}$$
$$= 10{,}667 + 22{,}400 = 33{,}067 \text{ psi}$$

Figure 166(a) also indicates the critical section advocated by Jensen for triangular stiffening plates.

The top plate is usually made $\frac{3}{8}$ in. or $\frac{1}{2}$ in. thick and will be taken as $\frac{1}{2}$ in. in this design; the width will be made $12\frac{1}{2}$ in. (the flange width is $11\frac{1}{2}$ in.).

The seat may also be made from a split beam, thus eliminating the top plate and its welding to the vertical stiffening plate.

If the connection is to be unrestrained, the top angles should be made similar to those in the design of unstiffened seat angles. See Art. 99.

The analysis of the welds is as follows. Figure 166(c) indicates the welds resisting the bending.*

$$y = \frac{2 \times 10 \times 5}{24} = 4.16 \text{ in.}$$

The moment of inertia about x–x, $\frac{bd^3}{3} = \frac{2 \times 1 \times 4.16^3}{3} = 48.2$ in.^{4}

$\frac{bd^3}{3} = \frac{2 \times 1 \times 5.84^3}{3} = 132.6$ "

Top weld $Ad^2 = 4 \times 4.16^2 = 69.2$ "

250.0 "

* H. M. Priest, "The Practical Design of Welded Steel Structures," *J. Am. Welding Soc.*, Vol. 12, August, 1933.

Since tearing of this weld at the top is critical,

$$s_m \text{ at top} = \frac{40 \times 5.1 \times 4.16}{250} = 3.4 \text{ kips per in.}$$

$$s_s = \frac{40}{24} = 1.67 \text{ kips per in.}$$

$$\text{Resultant} = \sqrt{(3.4)^2 + (1.67)^2} = 3.79 \text{ kips per in.}$$

$$D = \frac{3.79}{9.6} = 0.395 \text{ in.} \quad \text{Use } 7/16 \text{ in. weld.}$$

101. Continuity in Welded Frames. Continuity in welded frames may be developed by rigid and semi-rigid types of connections.

If the connection of member to member, or beam to column, is designed so that no relative rotation may take place between the connected members, we have the fully rigid type of frame. One assumption of the usual methods of analysis of continuous structures is that there can be no relative rotation of the members at a joint. Hence, rigid type connections apply to the rigid type of frame. In many instances the rigid type of joint is obtained by a complete all-round welding of member to member so that homogeneity may be assumed. Connections of the rigid type are often spoken of as giving 100% restraint.

If there is a relative rotation between the connected members they are spoken of as being *partially restrained.* In building work this type of connection is most common. In many cases of framing, semi-rigid connections are used which have been assumed to represent a free end condition; for example, riveted web angle connections for beams have always provided some restraint. The modern trend of design appears to favor the semi-rigid joint for tier building work.

Economy in design frequently may be obtained by the semi-rigid type of joint. Figure 167 illustrates the variation in bending moment in a beam under three types of load for various conditions of end restraint. The simple beam has a 0% end restraint and the fully rigid type 100% restraint.

For a beam *uniformly loaded* and with less than 75% end restraint the positive moment at the center of the span is the ruling factor in design. From 75% to 100% restraint the negative end moments are larger than the center positive moments. It also may be noted that at 75% restraint the positive moment equals the negative moment and also gives the smallest design moment values. The maximum moment at the center of the span for 50% restraint is not exceeded at any point

in the beam for any case of restraint between 50% and 100%. This is likewise true for the other cases of loading shown. Thus it is apparent that economy in beam design can be obtained by even a 50%

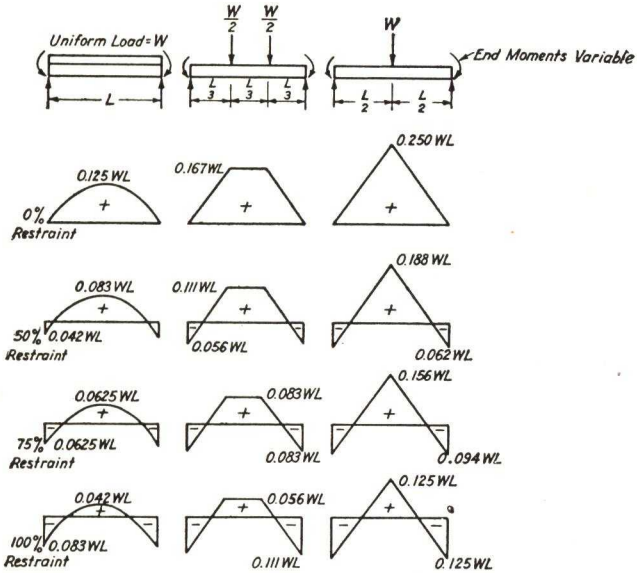

Fig. 167
End and Center Moments for Beams with Various Amounts of Connection Restraint.

restraint. No estimate of economy in beam design will be complete unless the cost of the connection is included in the estimate. Even if the cost is the same as for a simple beam, the added rigidity has been obtained without cost.

Quite elaborate tests were conducted at Lehigh University by Bruce Johnston and E. H. Mount* to determine the continuity that was developed in a frame when beams were framed to columns by a bottom seat angle and a top clip angle. These writers† have also developed a method of analysis treating semi-rigid instead of rigid joints. Their test results checked the theoretical analysis very closely.

102. Semi-rigid Connections. Tests‡ have been made to determine the strength and rotation characteristics of welded beam-to-column

* "Designing Welded Frames for Continuity," *J. Am. Welding Soc.*, October, 1939. Figure 167 of this chapter is similar to Fig. 1 in their paper.

† "Analysis of Building Frames with Semi-rigid Connections," by Johnston and Mount, *Trans. Am. Soc. Civil Engrs.*, Vol. 107, 1942, p. 993.

‡ "Tests of Miscellaneous Welded Building Connections," by Johnston and Deits, *J. Am. Welding Soc.*, Vol. 21, January, 1942.

connections; however, at the present time these tests are not comprehensive enough throughout all ranges of beam depth to warrant more than general statements concerning their design. The tests have nevertheless pointed out the general features of certain types, as well as revealed that certain connection forms are unsatisfactory. Future test programs should remove most of the present uncertainty.

Basically a semi-rigid connection must be capable of resisting the desired end moment with a satisfactory factor of safety, besides being flexible enough to provide the ideal end restraint. The connection should also be capable of carrying the vertical shear. Some types of connections are dangerous, since, if the welding or detail material used to achieve moment resistance should tear or fail, the beam is left without vertical support. This type should be avoided or supplemented by a seat angle to take the vertical reaction. It cannot be too greatly emphasized that all connections probably provide more or less restraint, but the amount is uncertain and may be released by the failure of the welding.

Section 1(*d*) of the Tentative Specifications for Welded Structures of the American Institute of Steel Construction, January, 1942, states that "Type 3 (semi-rigid) construction will be permitted only upon evidence that the connections to be used are capable of resisting definite moments without overstress of the welds. The proportioning of main members joined by such connections shall be predicated upon no greater degree of end restraint than the minimum known to be effected by the respective connections."

In general, although not all-inclusive, the characteristics of the types of semi-rigid connections tested have been these (see Fig. 168):

(*a*) Beam web welded to column with fillet welds. Low restraint furnished against rotation and a low or no factor of safety against general yielding. Should not be used without a seat angle.

(*b*) Beam resting on a seat angle and welded thereto with the web connected to column by small welded clip angles near top of beam. Connection is too weak to develop or resist moments induced by beam action.

(*c*) Beam resting on a seat with a top plate welded to the top flange of beam and butt-welded to the column. A high percentage of restraint is provided. This connection usually should provide a factor of safety against yielding of the connection under design loads. The weld to the column is critical and should be made with care.

(*d*) Web of beam connected to column by split I-beam. Detail

welded to both beam and column. Has a fair reserve strength against moment. Low restraint of 20 to 25%.

(*e*) Angles top and bottom of beam. Tests are more extensive for this type and connection can be designed readily. Restraint of 50 to 60% a possibility. (See example of design following.)

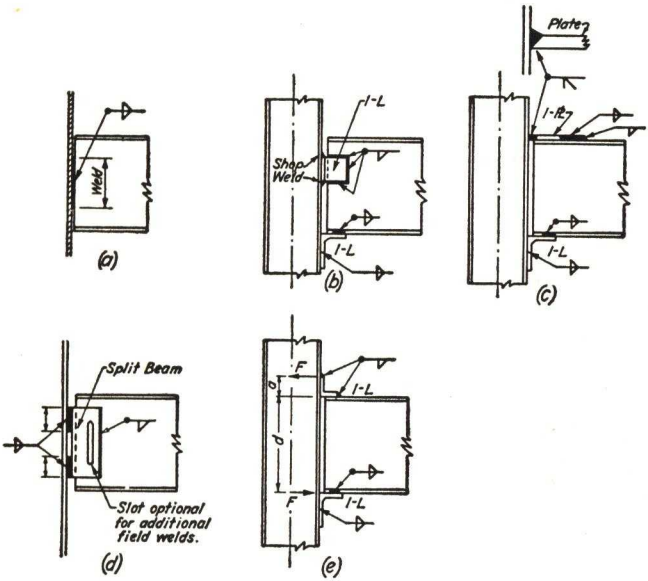

Fig. 168

103. Restraint with Top and Bottom Angles. Figure 168(*e*) indicates a common detail to secure end restraint in a beam to column connection. The degree of restraint depends on the connection material, the beam span, and the depth and properties of the beam. The end moment in the beam also depends upon the relative rotation of the end tangent of the beam with respect to a tangent to the elastic curve of the column. For the immediate discussion, assume that the column remains vertical and unbent. Thus, for a 50% end restraint, the tangent to the beam makes an angle with the horizontal of one-half the end slope of a simply supported beam.

In the detail shown in Fig. 168(*e*), the thickness of the top angle influences the rigidity greatly. It is to be noted that the top angle is welded to the column with one line of weld so that the free deflection of the heel of the angle is not interfered with.

Inge Lyse and Glenn L. Gibson* were among the first to investigate this type of connection. Tests were made at Lehigh University which indicated that the computed yield strength of the top angle, based upon yield point stresses in the top weld and at the root of angle, was about one-half the ultimate strength of the top angle. This indicated that the yield strength would be acceptable as a basis for design. The yield load F per lineal inch of top angle, angles all 3 in. × 3 in., for various thicknesses was computed as follows:

Angle Thickness, Inches	*Yield Load, per Inch of Angle, Pounds*
½	1100
9/16	1500
⅝	2100
11/16	2600
¾	3200
13/16	4000
⅞	5200

The permissible deflection of the heel of the angle from the flange of the column will vary from 0.03 in. to 0.07 in. for similar load conditions. These deflections will limit the span length of a uniformly loaded beam with 50% end restraint to a minimum of about 8 ft and a maximum of about 18 ft, although this latter possibly may be increased slightly. More tests are necessary to establish the type of connection for longer spans.

Example. Assume a beam 18 ft long, with a total uniform load of 30,000 lb. For 50% end restraint the maximum moment of $WL/12$ occurs at the middle

$$\text{Max. moment} = \frac{WL}{12} = \frac{30{,}000 \times 18 \times 12}{12} = 540{,}000 \text{ in.-lb}$$

$$\text{Reqd. section modulus} = \frac{540{,}000}{20{,}000} = 27.0 \text{ in.}^3$$

Use a 12-in. WF 25#

$$\frac{I}{c} = 30.9 \text{ in.}^3$$

Flange 6½-in. wide; therefore make top angle 6½-in. long.

$$\text{Force at toe of top angle} = \frac{\text{End moment}}{d + a} = \frac{270{,}000}{12 + 3} = 18{,}000 \text{ lb}$$

$$\text{Force per inch of top angle} = \frac{18{,}000}{6.5} = 2770 \text{ lb}$$

* Lyse and Gibson, "Effect of Welded Top Angles on Beam Column Connections," *J. Am. Welding Soc.*, Vol. 16, October, 1937.

From the table choose a 3 in. × 3 in. × 11/16 in. angle; the welding along the top edge will be a full fillet weld for the full thickness and length of the angle.

The lower seat angle should be designed in a manner similar to the seat angle of a simple span as described in Art. 99. The entire vertical reaction of the beam is assumed to be taken by this angle. The vertical welds may be designed for the vertical shear, and the resultant moment due to the force F and the vertical load. Should the top connection fail to develop the assumed force or should it rupture, the lower angle would be relieved of the force F, and the moment on the seat angle welds might be equal to that for a simple span. It is therefore safer to disregard the force F in designing the lower seat angle.

Both flanges of the beam must be secured to the top and bottom angles by sufficient welding to transmit the forces F. In our example, assuming ¼-in. fillet welds, the total length of weld required is $\frac{18{,}000}{2400} = 7.5$ in. Use 4 in. of weld on each side of the flange at lower seat angle. A 5/16-in. fillet weld, $6\frac{1}{2}$ in. long, is required along the toe of top angle.

104. Theory of Semi-rigid Connected Frames. The *Second Report* of the British Steel Structure Research Committee* included a comprehensive statement of the problem of semi-rigid connected frames by C. Batho and J. F. Baker. This report should be studied in detail by those interested in this problem as it is not within the province of this book to present all their theory.

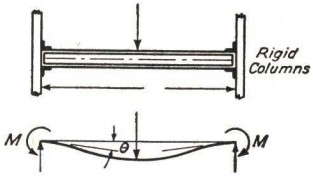

Fig. 169

To attack the problem basically, let a single beam be connected to rigid columns by semi-rigid connections. Figure 169 indicates that under load the connection will rotate and the beam assume an end slope of θ. If the beam were simply supported rather than connected as shown, the angle θ would be equal to the end slope of the simple span. If θ for the case shown is equal to one-half the simple beam slope, the beam would be 50% restrained.

The simplest way to view the problem is to assume that the connection is a separate structure with its rotation proportional to its moment loading. The beam also may be taken as a separate structure whose end slope must equal the rotation of the connection under the same restraining moment. Needless to say, the finding of the connection constants is the most difficult part. Tests have been made in this country on both welded and riveted joints to determine these connec-

* *First, Second, and Final Reports,* Steel Structures Research Committee, Department of Scientific and Industrial Research of Great Britain, H. M. Stationery Office, London, 1931–1936.

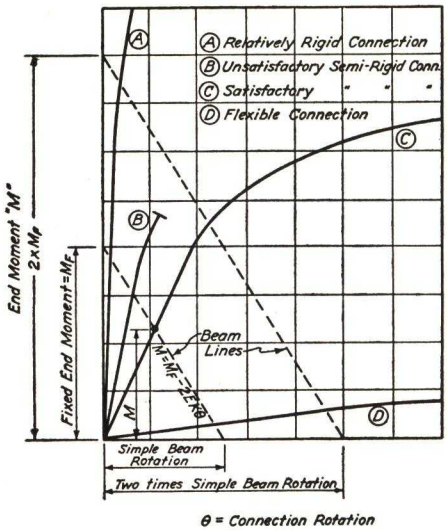

Fig. 170

tion constants. Johnston and Deits* have presented a diagram, Fig. 170, which very well presents the action of typical welded joints. The slope of the straight portion of the lines, *A*, *B*, *C*, or *D* may be called *JE*, where *J* is a constant for the connection and *E* is Young's modulus. The connection constant may be expressed as

$$J = \frac{M}{E\theta}$$

It should be pointed out that in general this constant is usable only for one beam depth, the depth of the test beam, although there are exceptions to this, depending on the connection.

The beam slope can be expressed in terms of M, the end moment, and M_F, the full fixed end moment, assuming a symmetrically loaded beam (see Art. 42).

$$M = M_F - \frac{2EI}{L}\theta = M_F - 2EK\theta \qquad [1]$$

For the connection,

$$M = JE\theta \qquad [2]$$

By equating [1] and [2],

$$\theta = \frac{M_F}{E(J + 2K)} \qquad [3]$$

Or M may now be expressed as

$$M = JE\theta = \frac{M_F J}{J + 2K} \qquad [4]$$

Then p, the percentage of rigidity of the combination of beam and connection, may be shown from the above to be the ratio of the moment M to M_F. Or

$$p = \frac{100}{1 + \dfrac{2K}{J}} \quad \text{(in \%)} \qquad [5]$$

The percentage of rigidity, or the end restraining moment, can also

* *J. Am. Welding Soc.*, January, 1942.

be found easily in Fig. 170 by drawing straight lines known as " beam lines," as originally named by C. Batho. Equation [1], $M = M_F - 2EK\theta$, is the equation of the beam line. When $M = 0$, the intercept on the θ-axis is equal to the end slope of a simply supported beam. When $\theta = 0$, the intercept on the moment axis is equal to M_F. The intersection of the beam line for any particular loading and L/d ratio with the connection curve automatically determines the rotation θ and the end restraining moment; hence the percentage of restraint may be found. Johnston and Deits indicate a second " beam line " for two times the design requirements, which indicates that, although connections A, C, and D will have a factor of safety of two against general yielding, connection B would be unsatisfactory.

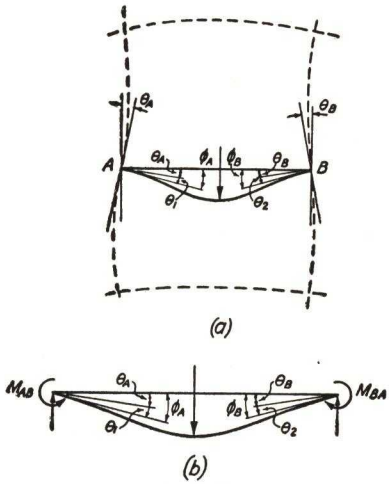

Fig. 171

In a frame the columns rotate; thus the end slope of a beam is given by column rotation plus the connection rotation. (See Fig. 171 (a).) The full development of the theory to handle this problem is given in the *Second Report* of the British Steel Structures Research Committee, and by Johnston and Mount in the *Trans.* of the American Society of Civil Engineers, Vol. 107.

In Fig. 171 (a), θ_A is the rotation of the column and θ_1 is the rotation of the connection under the action of end moment of the beam AB. The total slope of the beam is equal to $\theta_A + \theta_1 = \phi_A$.

To develop the slope deflection equations for a frame with semi-rigid connections, let us start with the geometry of the rotations shown in Fig. 171 (b). Let us assume that the connections at A and B are alike in regard to rotation and restraining characteristics.

From Fig. 171 (b), and with due consideration of the signs of moments as conventionally used in slope deflection:

$$\theta_A - \phi_A = \frac{1}{EJ} M_{AB} = qM_{AB} \qquad [6]$$

$$\theta_B - \phi_B = \frac{1}{EJ} M_{BA} = qM_{BA} \qquad [7]$$

where $q = \dfrac{1}{EJ}$.

The regular slope deflection equations will give

$$M_{AB} = 2EK(2\phi_A + \phi_B) - M_{F_{AB}} \qquad [8]$$

$$M_{BA} = 2EK(2\phi_B + \phi_A) + M_{F_{BA}} \qquad [9]$$

Hence,

$$\theta_A - \phi_A = 2EKq(2\phi_A + \phi_B) - qM_{F_{AB}} \qquad [10]$$

$$\theta_B - \phi_B = 2EKq(2\phi_B + \phi_A) + qM_{F_{BA}} \qquad [11]$$

Letting $\alpha = 2EKq$, equations [10] and [11] may be rewritten to give

$$\theta_A - \phi_A = 2\alpha\phi_A + \alpha\phi_B - qM_{F_{AB}} \qquad [12]$$

$$\theta_B - \phi_B = 2\alpha\phi_B + \alpha\phi_A + qM_{F_{BA}} \qquad [13]$$

Solving equations [12] and [13] for ϕ_A and ϕ_B in terms of θ_A and θ_B, and then substituting these values in equations [8] and [9] will yield the general slope deflection equations for the frame with semi-rigid connections.

$$M_{AB} = \frac{2EK}{3\alpha^2 + 4\alpha + 1}[2\theta_A + 3\alpha\theta_A + \theta_B + (3q\alpha + 2q)M_{F_{AB}} - qM_{F_{BA}}] - M_{F_{AB}} \qquad [14]$$

$$M_{BA} = \frac{2EK}{3\alpha^2 + 4\alpha + 1}[2\theta_B + 3\alpha\theta_B + \theta_A - (3q\alpha + 2q)M_{F_{BA}} + qM_{F_{AB}}] + M_{F_{BA}} \qquad [15]$$

To relate the beam and connection for a 50% rigidity of the connection, compute the end slope of a beam with 50% end restraint, or the slope of a beam with an end moment equal to one-half of M_F, the fixed ended moment.

$$\text{End slope} = \frac{M_F}{4EK}$$

For 50% restraint:

$$q = \frac{1}{EJ} = \frac{1}{E \times \dfrac{M}{E\theta}} = \frac{\theta}{M} = \frac{\dfrac{M_F}{4EK}}{\dfrac{M_F}{2}} = \frac{1}{2EK}$$

Also for 50% restraint:

$$\alpha = 2EKq = 1$$

For 75% rigidity:

$$\text{End moment} = \tfrac{3}{4}M_F$$

$$\text{End slope} = \frac{M_F}{8EK} \qquad q = \frac{1}{6EK} \qquad \alpha = \tfrac{1}{3}$$

If the beam AB of Fig. 171 is symmetrically loaded with the same type of connection at A and B, the slope deflection equations reduce to the following form for 50% rigidity:

$$M_{AB} = \frac{EK}{4}(5\theta_A + \theta_B) - \frac{M_{F_{AB}}}{2} \qquad [16]$$

$$M_{BA} = \frac{EK}{4}(5\theta_B - \theta_A) + \frac{M_{F_{BA}}}{2} \qquad [17]$$

Johnston* has shown that for a 50% assumed rigidity and symmetrical conditions, where the beam AB is part of a structural framework of beams and columns, the final end moment M_{AB} for all practical purposes may be given as

$$M_{AB} = -M_{F_{AB}}\left(\frac{1}{2 + \dfrac{K_{AB}}{\sum K_c}}\right)$$

where $\sum K_c$ is the sum of the stiffnesses of the upper and lower columns at the end A.

105. Plate Girders. The welded plate girder consists of a web plate with two flange plates fastened thereto by welding. Flange plates may be either a single plate (or a series of shorter plates butt-welded at their junctions), or two or more plates superimposed may be used. The single plate is to be preferred as less welding will be required, normally. The bearing and intermediate stiffeners are usually flat bars placed vertically, although the investigations made by Jensen and Lotz† indicate that there is some advantage in inclined stiffeners because of the increased stability of the web plate against buckling.

Design Problem

The design of a welded girder will be illustrated by the following example. The 1942 Tentative Specifications of the A.I.S.C. for Welded Steel Buildings will be used. (See Fig. 172(*a*).)

Span = 40 ft (laterally supported)
Depth of web plate = 50 in.
Uniform load = 5700 lb per ft, including weight of girder
Concentrated load at center of span = 80,000 lb

* "Design Economy by Connection Restraint," *Eng. News-Record,* October 10, 1940.

† Cyril D. Jensen and William F. Lotz, Jr., *J. Am. Welding Soc.,* Vol. 16, October, 1937, "Welded Girders with Inclined Stiffeners."

Maximum end shear = 154,000 lb

Maximum moment = 1,940,000 ft-lb

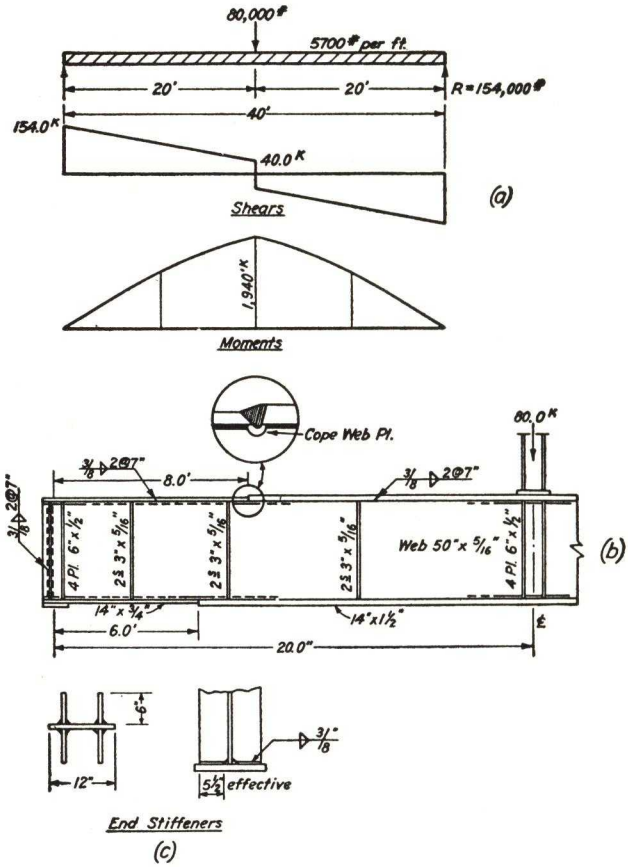

Fig. 172

Allowable Unit Stresses

Bending	20,000 psi
Shear on web	13,000 psi
Shear on fillet welds	9,600D lb per lineal in.
Tension, butt welds	16,000 psi
Compression, butt welds	20,000 psi

$$\text{Required thickness of web plate} = \frac{154{,}000}{13{,}000 \times 50} = 0.237 \text{ in.}$$

$$\text{Minimum by specification} = \frac{1}{170}\,\text{depth} = \frac{50}{170} = 0.294 \text{ in.}$$

Use $\frac{5}{16}$-in. web plate. Area = 15.62 sq in.

Flange Material at Center

Assume out to out of flange plates as 53 in.

$$\text{Required moment of inertia} = \frac{1{,}940{,}000 \times 12 \times 26.5}{20{,}000} = 30{,}800 \text{ in.}^4$$

$$\text{Moment of inertia of web} = \frac{\frac{5}{16} \times 50^3}{12} = 3{,}255$$

$$\text{To be furnished by flanges} = 27{,}545 \text{ in.}^4$$

$$2 \times A \times d^2 = 27{,}545 \text{ in.}^4$$

$$2 \times A \times 25.75^2 = 27{,}545 \text{ in.}^4$$

$$\text{Area of one flange plate} = 20.8 \text{ sq in.}$$

$$\text{Using plates 14 in. wide; reqd. thickness} = \frac{20.8}{14} = 1.49 \text{ in.}$$

At the middle of the girder use flange plates 14 in. × $1\frac{1}{2}$ in.

As shown by the moment diagram, it is not necessary to carry the heavy flange plates required at the middle the entire length of the girder. The minimum thickness permitted by the specifications is $\frac{1}{12}$ of the projection of the plate from the web, or $\frac{7}{12}$ in. It is well to make the end section of flange about half the thickness of the plate at the middle. This will give a 14 in. × $\frac{3}{4}$ in. flange plate for the ends.

The moment of inertia of the end section is:

$$\text{Web plate} = 3{,}255 \text{ in.}^4$$

$$\text{Flange plates } 2 \times \tfrac{3}{4} \times 14 \times (25.37)^2 = 13{,}515$$

$$\text{Total } I = 16{,}770 \text{ in.}^4$$

It is now necessary to find how far from the end the 14 in. × $\frac{3}{4}$ in. plate will be sufficient to carry the stress. It is to be noted that the unit stress in the bottom plate must be limited to 16,000 lb per sq in. instead of 20,000 lb per sq in., since the stress in the tension butt weld governs.

Let x be the distance from the end of the girder to the theoretical splicing point. Then, equating external bending moment to internal resisting moment,

$$154.0x - \frac{5.7x^2}{2} = \frac{16{,}770 \times 16.0}{25.75 \times 12}$$

Solving for x,

$$x = 6.4 \text{ ft}$$

The permissible unit stress in the compression butt weld is 20,000 lb per sq in., so the top flange plate, 14 in. × ¾ in., may be extended toward the middle of the span a short distance farther than the bottom plate. To determine the theoretical distance which the top end flange plate may extend involves the solution of a girder of unsymmetrical cross section. While this is not difficult, it is doubtful if the unit stresses so determined would be accurate because of the abrupt change in flange section and shift of the neutral axis.

In our case the theoretical length of the ¾-in. top flange plate is 9.2 ft. This would permit it to extend 2.8 ft beyond the splice in the bottom plate. A good design would be

Bottom flange	2 plates 14 in. × ¾ in. × 6 ft, 6 in.
	1 plate 14 in. × 1½ in. × 28 ft
Top flange	2 plates 14 in. × ¾ in. × 8 ft, 6 in.
	1 plate 14 in. × 1½ in. × 24 ft

Welding of Flange Plate to Web. The welds at the junction of the web plate and flanges must resist horizontal shear. The horizontal shear at this junction per lineal inch of girder is given by VQ/I, where

V = total shear at section,

Q = statical moment of cover plates about neutral axis of girder,

I = moment of inertia of the gross cross section.

At the reaction,

$$\text{Shear per lineal inch} = \frac{154{,}000 \times \frac{3}{4} \times 14 \times 25.38}{16{,}770} = 2450 \text{ lb}$$

The minimum size weld to be used with a flange plate of ¾-in. thickness is ¼ in. and, for a 1½-in. plate, it is ⅜ in. (See Art. 93.) The ⅜-in. fillet weld will be adopted throughout for flange welding. For a ⅜-in. fillet weld the allowable shear load per inch of weld is 3600 lb. For two fillet welds, one on either side of the web, the safe load is 7200 lb per in. The minimum length of intermittent fillet weld by the specifications is $4D$ or $4 \times \frac{3}{8} = 1\frac{1}{2}$ in. We will use 2 in. minimum length.

$$\text{Required spacing} = \frac{7200 \times 2}{2450} = 5.8 \text{ in.} \quad \text{(say 5 in. c. to c. at reaction)}$$

The specifications require that the clear spacing between intermittent fillet welds shall not exceed 16 times the thickness of the thinnest con-

nected plate where compression is concerned or, in this case, $16 \times \frac{5}{16} = 5$ in. This condition is satisfied.

Spacing 6.0 ft from reaction considering the ¾-in. cover plates.

$$V = 119.8 \text{ kips}$$

$$\text{Required spacing} = \frac{7200 \times 2}{2450 \times \dfrac{119.8}{154.0}} = 7.5 \text{ in.}$$

Considering the 1½-in. cover plates at the same section,

$$\text{Spacing} = \frac{7200 \times 2}{\dfrac{119{,}800 \times 1\frac{1}{2} \times 14 \times 25.75}{31{,}940}} = 7.1 \text{ in.}$$

But using 2 in. intermittent welds, and complying with the maximum clear spacing requirement of 5 in., the welds may be spaced only 7 in. on center, which is sufficient. Welding should be continuous for a distance equal to the width of the flange at the ends of the girder and at the splice point in the flange.

Web Stiffeners. Section 20(*e*) of the tentative welding specifications requires that, if the ratio of the clear depth of the web to its thickness exceeds 70, intermediate stiffeners shall be provided at all points where this ratio exceeds $\frac{8000}{\sqrt{v}}$, in which v is the maximum unit shear in the web at the point.

The clear distance between intermediate stiffeners, when stiffeners are required by the foregoing, shall not exceed 84 in. or that given by the formula,*

$$d = \frac{270{,}000t}{v} \sqrt[3]{\frac{vt}{h}}$$

in which d = clear distance between stiffeners,

h = clear depth of the web,

t = thickness of the web.

Stiffeners are commonly used in pairs, although they may alternate on opposite sides of the web.

Stiffeners employed to stay the web plate against buckling, and not for the transfer of concentrated loads from flange to web, shall be of a

* This formula is solved graphically on page 129 of the *Steel Construction Handbook* of the American Institute of Steel Construction.

section not less than that required by the formula,

$$I_s = 0.000{,}000{,}16h^4$$

in which h = the depth of the web,

I_s = moment of inertia of the stiffeners or stiffener (figured with a common axis at the center line of web for stiffeners in pairs, or with the axis at the inner face between stiffener and web for single stiffeners).

The required spacing of the stiffeners at the end of the girder and near the middle are calculated below.

At the end,

$$v = \frac{154{,}000}{50 \times 5/16} = 9850 \text{ psi}$$

$$d = \frac{270{,}000 \times 5/16}{9850} \sqrt[3]{\frac{9850 \times 5/16}{50}} = 33.8 \text{ in.}$$

At the middle,

$$v = \frac{40{,}000}{50 \times 5/16} = 2560 \text{ psi}$$

$$d = 83.0 \text{ in.}$$

The required spacing at intermediate points may be determined with sufficient accuracy by direct interpolation between these limits.

The stiffeners will be located in pairs, and the required moment of inertia of each pair is

$$I_s = 0.000{,}000{,}16 \times (50)^4 = 1.0 \text{ in.}^4$$

Two plates, 3 in. × 5/16 in. will answer for each pair.

Stiffeners at Concentrated Loads. The following is quoted from the Welding Specifications, Section 20(*e*):

> Bearing stiffeners shall be placed in pairs on the webs of plate girders at unframed ends and at points of concentrated loads. Such stiffeners shall have a close bearing against the loaded flanges and shall extend as closely as possible to the edge of the flange plates. They shall be designed as columns subject to the provisions of Sec. 10(*a*), assuming the column section to comprise a pair of stiffeners and a centrally located strip of the web equal to not more than 25 times its thickness at interior stiffeners or a strip equal to not more than 12 times its thickness when the stiffeners are located at the end of the web. The column length shall be taken as not less than 3/4 of the length of the stiffeners in computing the ratio L/r. Only that portion of the stiffener outside of the flange-to-web welds shall be considered as effective in bearing.

The end stiffeners will be designed with the arrangement shown in Fig. 172(*c*). In this design the effect of the web on L/r is small and

will therefore be neglected.

$$\text{Trial required area for one bar} = \frac{154{,}000}{15{,}000 \times 4} = 2.57 \text{ sq in.}$$

Using bars 6 in. wide,

$$t = \frac{2.57}{5.5} = 0.47 \text{ in.}$$

According to the specifications, the minimum thickness is

$$t = \tfrac{1}{12} \times 6 = \tfrac{1}{2} \text{ in.}$$

Moment of inertia about centerline of web:

$$4\left(3 \times 3.15^2 + \tfrac{1}{2} \times \frac{6^3}{12}\right) = 154.8 \text{ in.}^4$$

$$r = \sqrt{\frac{154.8}{4 \times 3 + 12 \times \tfrac{5}{16}}} = 3.1 \text{ in.}$$

$$\frac{L}{r} = \frac{\tfrac{3}{4} \times 50}{3.1} = 12.1$$

$$\frac{P}{A} = 17{,}000 - 0.485\left(\frac{L}{r}\right)^2 = 16{,}930 \text{ psi}$$

$$\text{Capacity of stiffeners} = 16{,}930 \times 4 \times 5\tfrac{1}{2} \times \tfrac{1}{2} = 186{,}200 \text{ lb}$$

This is sufficient.

The stiffeners must have enough welding to transfer safely the reaction to or from the web plate. Assuming $\tfrac{3}{16}$-in. fillet welds, the welding on one stiffener may be computed as follows:

$$\text{Total length of } \tfrac{3}{16}\text{-in. fillet for one stiffener} = \frac{154{,}000}{4 \times 1800} = 21.4 \text{ in.}$$

Intermittent welds 2 in. long on both sides of the stiffener spaced approximately 7 in. c. to c. will provide

$$2 \times \tfrac{50}{7} \times 2 = 28 \text{ in.} \quad \text{(which is more than sufficient)}$$

The design of the end stiffeners in this case could be used for the stiffeners under the concentrated load at the center line, since as in the design of the end stiffeners, minimum thicknesses and sizes will rule.

106. Butt Welds. The butt weld is usually easier to design than a fillet weld; however, there are also many inherent defects that call for proper techniques* to insure good penetration or fusion, and freedom

* See American Welding Society Code for Arc and Gas Welding in Building Construction, 1941.

from residual stresses. The allowable load on a butt weld is the product of the design unit stress and the effective area of the throat of weld.*

The American Welding Society gives two major classes of butt welds, complete penetration butt welds and incomplete penetration butt welds. The effective throat area of a butt weld depends on this classification. The Code should be referred to for a complete discussion.

The butt joints prequalified in the American Welding Society Code are given in Figs. 173 and 174. Butt joints fall into the following classifications:

Open Square	Double V
Closed Square	Single J
Single Bevel	Double J
Double Bevel	Single U
Single V	Double U

The proper forms of the grooves and limitations as to the maximum thickness of plate as well as the effective throat thickness are shown on Figs. 173 and 174. The choice of one form over the other depends on the thickness of the plate, the position of the weld, and whether welding can take place from both sides of the groove. From the standpoint of plate thickness, for plates up to and including $\frac{5}{16}$ in., the open or closed butt can be used; above $\frac{5}{16}$ in. in thickness, some form of beveling is desirable to insure penetration. From $\frac{5}{16}$ in. to $\frac{3}{4}$ in., the single bevel weld or the single V may be used. Above $\frac{3}{4}$ in. thickness, the double bevel or double V would probably be used. The J and U welds are variations of the bevel and V welds and may be used with thick plates to avoid using small electrodes for the first few passes and to eliminate or modify certain types of distortion.

107. Fatigue of Welded Joints. It has long been known that members or joints subjected to a large number of repeated loadings, even though those loadings produce stresses well below the elastic limit of the material, will eventually fail. These failures due to repeated loadings are known as "fatigue" failures. They may be failures of the joints or they may be failure of a member adjacent to a joint.

There are two main contributing factors which cause fatigue, (1) microscopic or larger flaws within the metal and (2) abrupt changes in the stressed cross section. These two factors are, in reality, the same, because a flaw would constitute an abrupt change in cross section.

Early tests to determine the fatigue properties of metals were made on small laboratory specimens, and it was found that if the specimens were turned and polished they withstood repeated stresses very

* American Welding Society Code, Sections 209, 210.

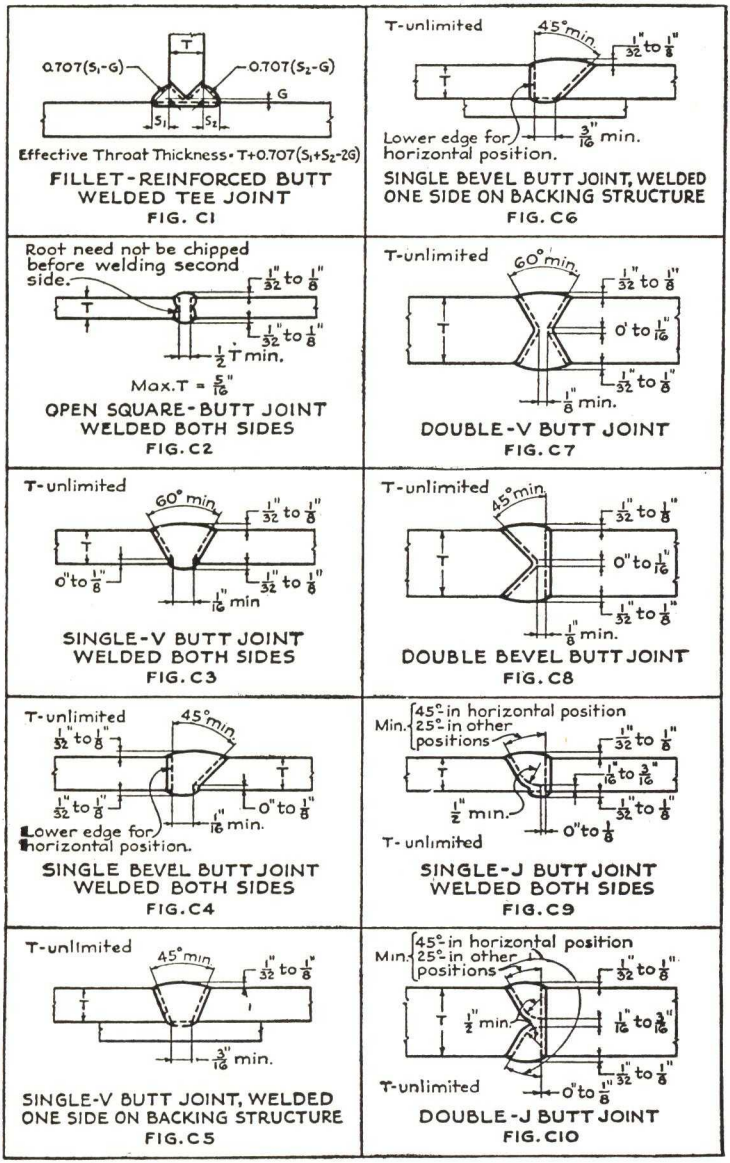

Courtesy American Welding Society.

FIG. 173. Prequalified joints, A.W.S. Code.

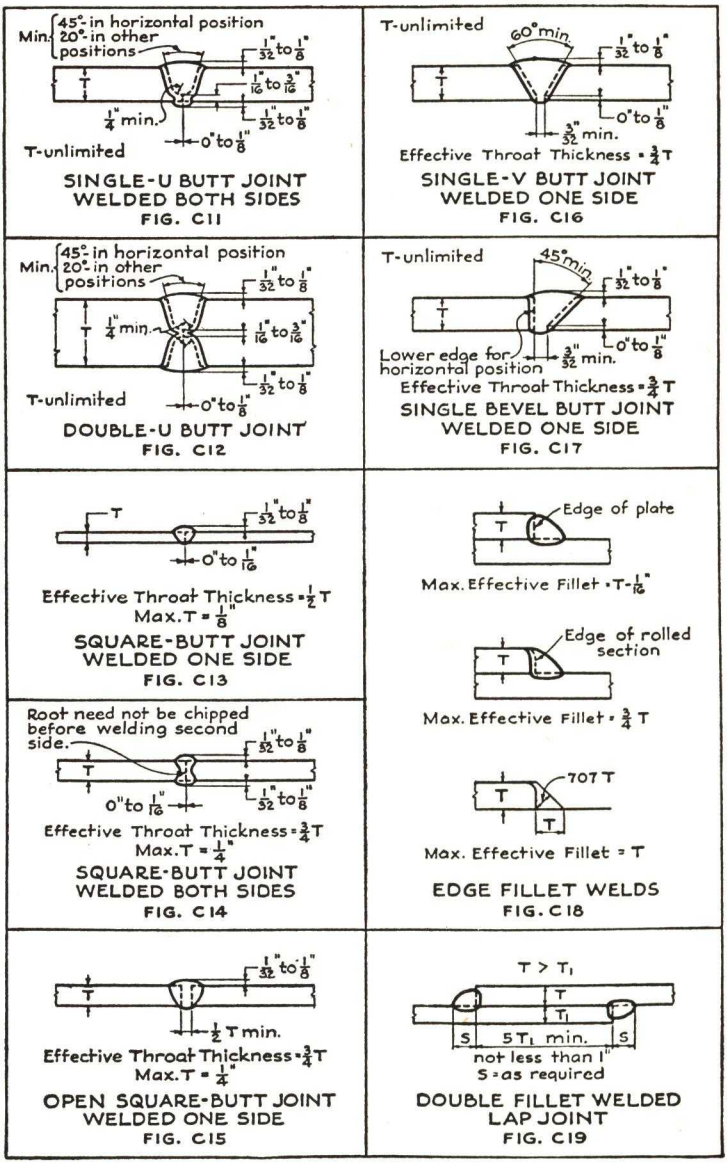

Courtesy American Welding Society.

FIG. 174. Prequalified joints, A.W.S. Code.

much better than if left rough. Even small scratches on the surface produce " stress raisers " and will start incipient failure.

Photoelastic studies show that, at any abrupt change in cross section, there is a very considerable concentration of stress and that the maximum unit stress may be several times the average unit stress, its magnitude depending upon the abruptness and the amount of change in cross section. These excessively high unit stresses immediately adjoining the stress raiser start the failure, and repetition of the stress progressively increases the incipient fracture until finally failure of the whole piece occurs.

When two pieces are joined, either by riveting or welding, large stress raisers are produced, unavoidably. In riveted joints, the rivet holes constitute stress raisers in the main material; and in welded joints the weld bead or " reinforcement," as well as small crevices and irregularities, slag inclusions, and flaws are stress raisers. These, of course, are in addition to microscopic flaws within the metal and irregularities due to rolling and manufacture.

Engineers were accustomed to thinking of the static strength of carbon structural steel as being of the order of 63,000 lb per sq in., and of the fatigue strength of machined specimens of the same material as being of the order of 47,000 lb per sq in., but knowledge of the fatigue strengths of full-sized members and welded joints in the " as welded " condition was lacking. Realizing this situation, the engineers of the San Francisco-Oakland Bay Bridge financed a series of tests on the fatigue strength of riveted joints.* The Welding Research Committee of the Engineering Foundation organized a committee known as Committee F, to plan and carry out a similar investigation of the fatigue strength of welded joints connecting structural members.† An in-

* See " Fatigue Tests of Riveted Joints," by W. M. Wilson and Frank P. Thomas, *Bulletin* 302, Engineering Experiment Station, University of Illinois.

†" Fatigue Tests of Butt Welds in Structural Steel Plates," by W. M. Wilson and Arthur B. Wilder, *Bulletin* 310, Engineering Experiment Station, University of Illinois.

" Fatigue Tests of Welded Joints in Structural Steel Plates," by W. M. Wilson, W. H. Bruckner, John V. Coombe, and Richard A. Wilde, *Bulletin* 327, Engineering Experiment Station, University of Illinois.

" Effect of Periods of Rest on the Fatigue Strength of Welded Joints," *Report* 1 (January, 1941) of Committee F of the Industrial Research Division of the Welding Research Committee of the Engineering Foundation.

" Calculation and Graphical Representation of the Fatigue Strength of Structural Joints," *Report* 2 (February, 1942) of Committee F of the Industrial Research Division of the Welding Research Committee of Engineering Foundation.

" Fatigue Strength of Fillet-weld and Plug-weld Connections in Steel Structural Members," by W. M. Wilson, *Bulletin,* Engineering Experiment Station, University of Illinois.

vestigation has also been made to determine the effect of the range of stress upon the fatigue strength of metals.*

In planning the tests two types of member were visualized: (1) a member which would receive its maximum stress 100,000 times during its lifetime and (2) a member which would receive its maximum stress 2,000,000 times during its lifetime. It is believed that nearly all parts of structures will come within these limits. The structural engineer is not interested in the fatigue strength of members or connections based upon failure at the much larger number of repetitions of the load encountered in the operation of machines.

Tests were made using three types of stress cycles:

(1) Compression to equal tension.
(2) Zero to tension.
(3) Tension to tension half as great.

The table below shows a summary of results of tests on butt welds in ⅞ in. carbon steel plates of structural grade.

FATIGUE STRENGTH OF BUTT WELDS IN ⅞-INCH CARBON STEEL PLATES
ULTIMATE STRENGTH 61,300 PSI YIELD POINT 34,800 PSI

Description of Specimen	Stresses in Kips per Sq In.					
	Tension to Compression		Zero to Tension		½ Tension to Tension	
No cycles	100,000	2,000,000	100,000	2,000,000	100,000	2,000,000
Solid plate, no joints	27.7	17.1	49.8	31.6	No Failure	50.0+
Butt weld, reinforcement machined flush with plate	28.9		48.8	28.4		43.7
Butt weld, as welded	22.3	14.4	33.1	22.5	53.3	36.9

These values are for manually deposited metallic-arc welds shop-welded in the flat position under the most favorable conditions of operator skill and intelligence of supervision. Tests of similar welds

* "The Effect of Range of Stress on the Fatigue Strength of Metals," by James O. Smith, *Bulletin* 334, Engineering Experiment Station, University of Illinois.

made by first-class fabricating shops working under commercial conditions indicate that an occasional weld may be expected to have a fatigue strength only 75% as great as the values given in the table.

It was noted that failure of good welds almost invariably occurred at the junction of the plate and the weld, that is, at the stress raiser. When the reinforcement was machined off the weld flush with the plate, the results given in the table show that there is little difference in fatigue strength between the solid plate and the plates joined by a butt weld.

Such tests as have been made on "structural carbon" steel plates, whole or joined by butt welds, indicate that if less than about one-half to two-thirds of the total stress is alternately released and reapplied, no matter how often, or if any greater ratio of release and reapplication occur fewer than several thousand times, the fatigue strength is probably not far enough below the static yield point to need consideration in structural design.

Periods of rest interspersed throughout the tests did not have a significant effect upon the fatigue strength of welded joints.

A study of fatigue strength of butt welds that were stress-relieved by heat treatment indicates that stress-relieving did not affect the fatigue strength. This was true for specimens with reinforcement off as well as for those with reinforcement on.

Obviously, in structural work it is not practical to remove the reinforcing by grinding or milling, and the welds must serve in the *as welded* condition. The question then arises as to the permissible unit stresses to use in design of butt-welded joints connecting plates subject to repeated or reversing stresses.

1. The tests show that when $\frac{\text{min.}}{\text{max.}} = \frac{1}{2}$ ($\frac{1}{2}$ tension to tension) the design may be based on the static unit stress.

2. When $\frac{\text{min.}}{\text{max.}} = 0$ (zero to tension or compression) the breaking strength for 2,000,000 repetitions is about two-thirds of the static yield point.

3. When $\frac{\text{min.}}{\text{max.}} = -1$ (complete reversal tension to compression) the breaking strength for 2,000,000 repetitions is about four-tenths of the static yield point.

A fatigue equation which may be used to take into account the range

of stress pulsations is given below.

Let f = permissible fatigue unit stress

s = permissible static unit stress

$$f = \frac{s}{1.5 - \frac{\text{min.}}{\text{max.}}}, \quad \text{but not to exceed } s$$

108. Welding Symbols.* Just as conventional riveting symbols have been adopted by the structural industry, so must a conventional system of welding symbols be adopted. The American Welding Society has developed a system of welding symbols which, although not entirely foolproof, point the way towards a universal system. At first glance they appear to be complicated; that may seem to be so since they apply to all classes of work. But use of them should make them clear.

As stated in the A.W.S. instructions for their use, the symbols are simply picture-writing, showing graphically the type of weld required. Figure 175 is the recommended list of symbols. In applying them to a drawing, they are usually pictured in conjunction with a conventional scheme showing size, length, pitch, shop or field weld, all placed upon a reference line, as in Fig. 175.

The arrow of the reference line under the present A.W.S. code points to the joint or member to be grooved. The side of the joint to which the arrow points is called the near side, and the other side of the joint is called the far side.

109. Column Splices and Details. Figure 176 indicates typical details of column splices as recommended by the A.I.S.C. Tentative Specifications. The purpose of a column splice in the majority of tier buildings is to hold the column sections in line vertically and to facilitate erection. In some buildings, the splice may be subjected to a wind moment and a tension force due to combining wind direct stress with dead load stress, which will call for a splice designed to meet these conditions.

Figure 177 indicates a few typical details of beam-to-column connections. Figure 178 shows the recommended standard details of the American Institute of Steel Construction for beam-to-beam connections. The *Procedure Handbook of Arc Welding, Design and Practice,* published by the Lincoln Electric Company, Cleveland, Ohio, is profusely illustrated with typical welding details and is highly recommended as a source of information.

* Welding Symbols of American Welding Society, Appendix B, of 1941 Code for Arc and Gas Welding in Building Construction. Also refer to the A. W. S., " Welding Symbols and Instructions for Their Use."

ARC AND GAS WELDING SYMBOLS

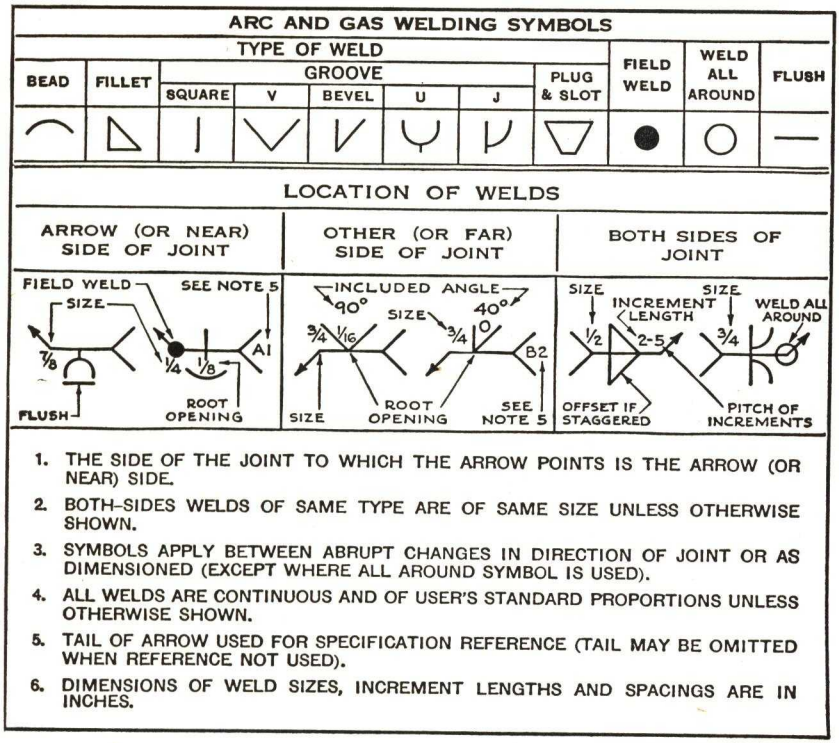

Courtesy of American Welding Society.

Fig. 175.

The above symbols are recommended by American Welding Society for incorporation on drawings specifying fusion welding. For more detailed instruction in the use of these symbols, refer to "Welding Symbols and Instructions for Their Use," published by the American Welding Society.

If the welding on the hidden face is not different from that on the visible face, the fact that there are two members must be covered by the drawing and the bill of material.

TYPICAL DETAILS OF COLUMN SPLICES

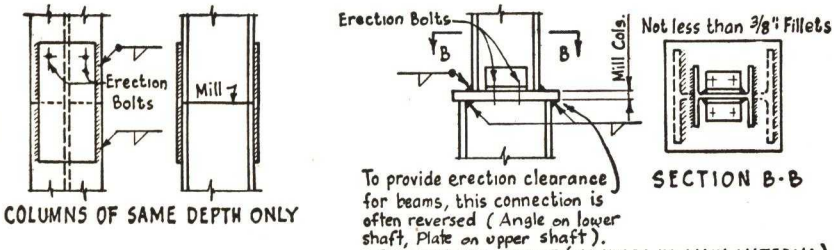

Courtesy of American Institute of Steel Construction.

Fig. 176.

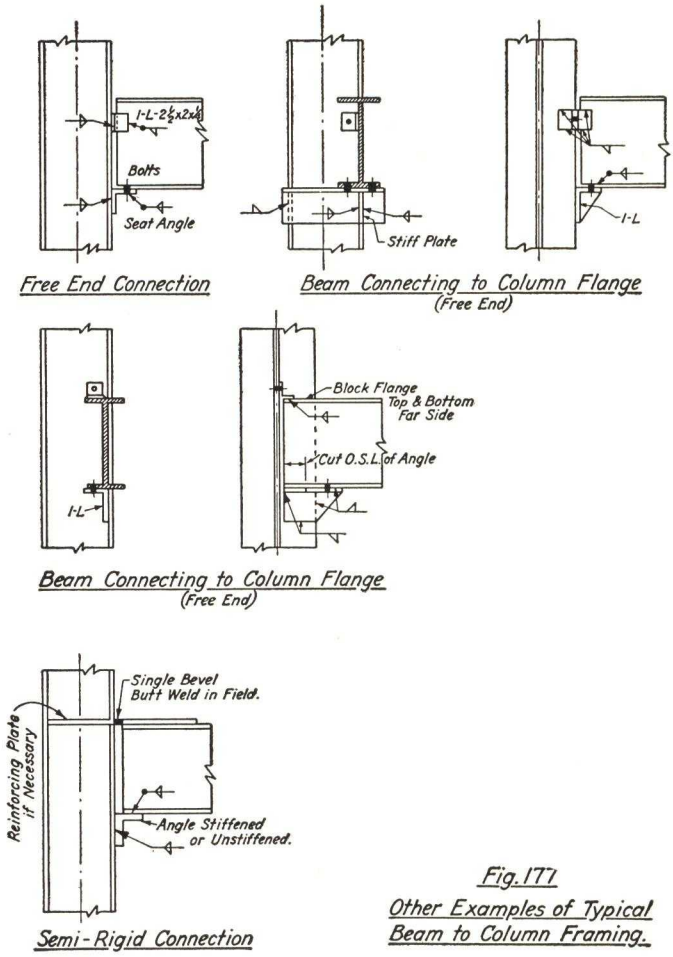

Fig. 177
Other Examples of Typical Beam to Column Framing.

RECOMMENDED TENTATIVE STANDARD DETAILS

TYPICAL BEAM DETAILS

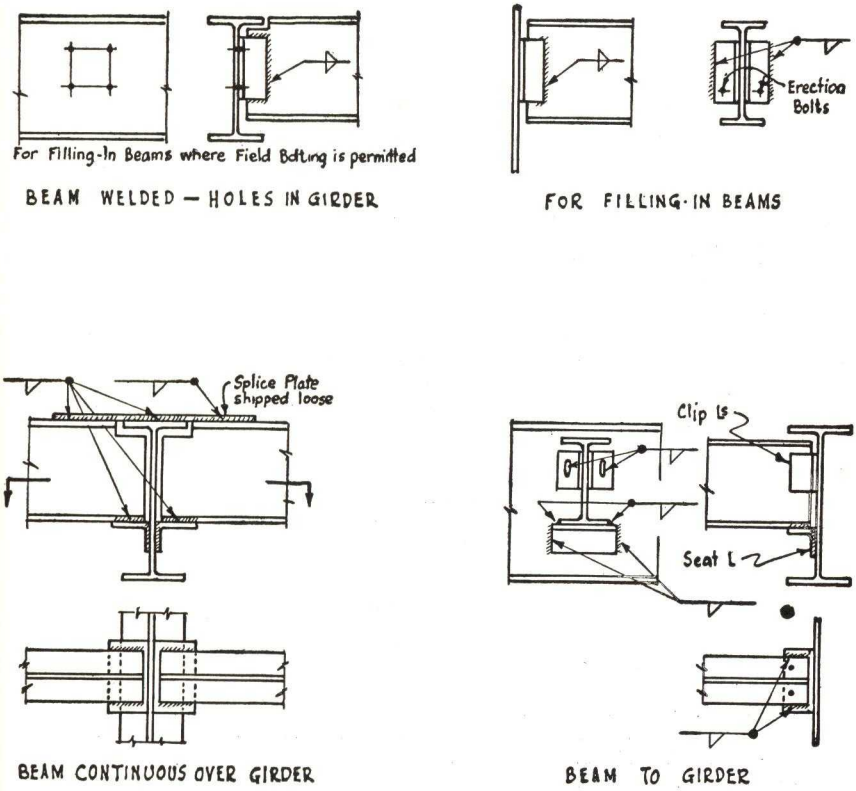

Courtesy of American Institute of Steel Construction.

Fig. 178.

WELDS FOR ATTACHING ANGLES

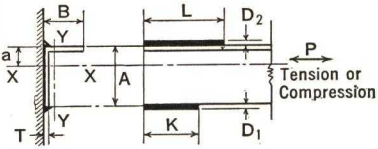

Assume $D_1 = D_2 = D$
Weld Size D = Angle thickness T
Allowable shear on leg of fillet weld 9.6 K/in²

Then $K = \frac{Pa}{9.6AD}$ $L = \frac{P(A-a)}{9.6AD}$

Eccentricity about Y-Y axis has been neglected. If leg B ≧ A and D_2 ≧ 2T the additional stress induced in the weld will not exceed 25% of the computed stress

Lengths of welds are adjusted to nearest ½". Since no weld should be shorter than four times the weld size it may be necessary to increase the lengths of short welds.

Since for any particular case length of weld times size of weld is a constant, either may be varied by proportion.

$$\frac{\text{New Length}}{\text{Tabular Length}} = \frac{\text{Tabular Size}}{\text{New Size}}$$

* Special Sizes

Size of Angle	Lengths of Welds for Various Unit Stresses in Angles																					
	20K/in²		19K/in²		18K/in²		17K/in²		16K/in²		15K/in²		14K/in²		13K/in²		12K/in²		11K/in²		10K/in²	
	K	L	K	L	K	L	K	L	K	L	K	L	K	L	K	L	K	L	K	L	K	L
8 x 8	9.0	23.5	8.5	22.0	8.0	21.0	7.5	20.0	7.0	18.5	7.0	17.5	6.0	16.5	5.0	15.0	5.5	14.0	5.0	13.0	4.5	12.0
8 x 6	9.0	20.0	8.0	19.0	8.0	17.5	7.5	16.5	7.0	15.5	6.5	15.0	6.0	14.0	5.5	13.0	5.0	12.0	5.0	10.5	4.0	10.0
8 x 4	8.5	15.5	8.0	15.0	7.5	14.0	7.5	13.0	7.0	12.5	6.5	11.5	6.0	11.0	5.5	10.0	5.0	9.5	4.5	8.5	4.0	8.0
7 x 4	7.5	14.5	7.0	14.0	7.0	13.0	6.5	12.5	6.0	12.0	6.0	11.0	5.5	10.0	5.0	10.0	4.5	9.0	4.5	8.0	4.0	7.0
6 x 6	6.5	17.5	6.5	17.0	6.0	16.0	6.0	15.0	5.5	14.0	5.5	13.0	5.0	12.0	4.5	11.5	4.0	11.0	4.0	10.5	3.5	8.5
6 x 4	6.5	14.0	6.5	13.0	6.0	12.5	5.5	11.5	5.0	11.0	5.0	10.0	4.5	9.5	4.5	8.5	4.0	8.0	3.5	7.5	3.0	7.0
* 6 x 3½	6.5	12.5	6.0	12.0	6.0	11.0	5.5	10.5	5.0	10.5	5.0	9.5	4.5	9.0	4.5	8.0	4.0	7.5	3.5	7.0	3.0	6.5
5 x 5	5.5	14.5	5.0	14.0	5.0	13.0	5.0	12.5	4.5	11.5	4.0	11.0	4.0	10.0	3.5	9.5	3.5	9.5	3.0	8.0	3.0	7.0
5 x 3½	5.5	11.5	5.0	11.0	5.0	10.5	4.5	10.0	4.5	9.0	4.0	9.0	4.0	8.0	3.5	7.5	3.5	7.0	3.0	6.5	3.0	5.5
* 5 x 3	5.5	10.5	5.0	10.0	5.0	9.5	4.5	9.0	4.5	8.5	4.0	8.0	4.0	7.5	3.5	7.0	3.0	6.5	3.0	6.0	3.0	5.0
4 x 4	4.5	12.0	4.5	11.0	4.0	10.5	4.0	10.0	3.5	9.5	3.5	8.5	3.5	8.0	3.0	7.5	3.0	7.0	2.5	6.5	2.5	5.5
4 x 3½	4.5	10.5	4.5	10.0	4.0	9.5	4.0	9.0	3.5	8.5	3.5	8.0	3.0	7.5	3.0	6.5	3.0	6.0	2.5	6.0	2.5	5.0
4 x 3	4.5	9.5	4.5	9.0	4.0	8.5	4.0	8.0	3.5	8.0	3.5	7.0	3.0	7.0	3.0	6.5	3.0	5.5	2.5	5.5	2.5	4.5
3½ x 3½	4.0	10.0	4.0	9.5	3.5	9.5	3.5	8.5	3.0	8.5	3.0	7.5	3.0	7.0	2.5	6.5	2.5	6.0	2.5	5.5	2.0	5.0
3½ x 3	4.0	9.0	4.0	8.5	3.5	8.5	3.5	7.5	3.0	7.5	3.0	7.0	3.0	6.5	2.5	6.0	2.5	5.5	2.0	5.0	2.0	4.5
* 3½ x 2½	4.0	8.0	4.0	7.5	3.5	7.5	3.0	7.0	3.0	7.0	3.0	6.0	3.0	5.5	2.5	5.5	2.5	5.0	2.0	4.5	2.0	4.0
3 x 3	3.5	8.5	3.5	8.0	3.0	8.0	3.0	7.0	3.0	7.0	2.5	6.5	2.5	6.0	2.0	6.0	2.0	5.5	2.0	4.5	1.5	4.5
3 x 2½	3.5	7.5	3.5	7.0	3.0	7.0	3.0	6.5	3.0	6.0	2.5	6.0	2.5	5.0	2.0	5.0	2.0	4.5	2.0	4.0	1.5	4.0
* 3 x 2	3.5	6.5	3.0	7.0	3.0	6.0	3.0	5.5	2.5	5.5	2.5	5.0	2.0	5.0	2.0	4.5	2.0	4.0	2.0	3.5	1.5	3.5
2½ x 2½	3.0	7.5	3.0	7.0	2.5	6.5	2.5	6.0	2.5	5.5	2.0	5.5	2.0	5.0	2.0	4.5	1.5	4.5	1.5	4.0	1.5	3.5
2½ x 2	3.0	6.5	3.0	6.0	2.5	6.0	2.5	5.0	2.5	5.0	2.0	5.0	2.0	4.5	2.0	4.0	1.5	4.0	1.5	3.5	1.5	3.0
2 x 2	2.5	5.5	2.0	5.5	2.0	5.5	2.0	5.0	2.0	4.5	1.5	4.5	2.0	4.0	1.5	4.0	1.5	3.5	1.5	3.0	1.0	3.0
2 x 1½	2.5	4.5	2.5	4.5	2.0	4.5	2.0	4.0	2.0	4.0	2.0	3.5	1.5	3.5	1.5	3.0	1.5	3.0	1.5	2.5	1.0	2.5
1¾ x 1¾	2.0	4.0	2.0	4.0	1.5	4.0	1.5	3.5	1.5	3.5	1.5	3.0	1.5	3.0	1.5	2.5	1.5	2.5	1.0	2.5	1.0	2.0
1¾ x 1¼	1.5	3.5	1.5	3.5	1.5	3.5	1.5	3.0	1.5	3.0	1.5	2.5	1.5	2.0	1.5	2.0	1.0	2.0	1.0	2.0	1.0	2.0
1½ x 1½	1.5	3.0	1.5	3.0	1.5	2.5	1.5	2.5	1.0	2.5	1.0	2.5	1.0	2.0	1.0	2.0	1.0	2.0	1.0	1.5	1.0	1.5
1¼ x 1¼	1.0	2.0	1.0	2.0	1.0	2.0	1.0	2.0	1.0	1.5	1.0	1.5	1.0	1.5	1.0	1.5	0.5	1.5	0.5	1.5	0.5	1.5
1 x 1	1.0	1.0	1.0	1.0	1.0	1.0	0.5	1.0	0.5	1.0	0.5	1.0	0.5	1.0	0.5	1.0	0.5	1.0	0.5	0.5	0.5	0.5

K and L for any other unit stresses may be obtained by proportion or interpolation.

Courtesy Bethlehem Steel Company—Fabricated Steel Construction 4-10-33

CHART NO. 1

These ten design charts are presented by courtesy of the Fabricated Steel Division of the Bethlehem Steel Company.

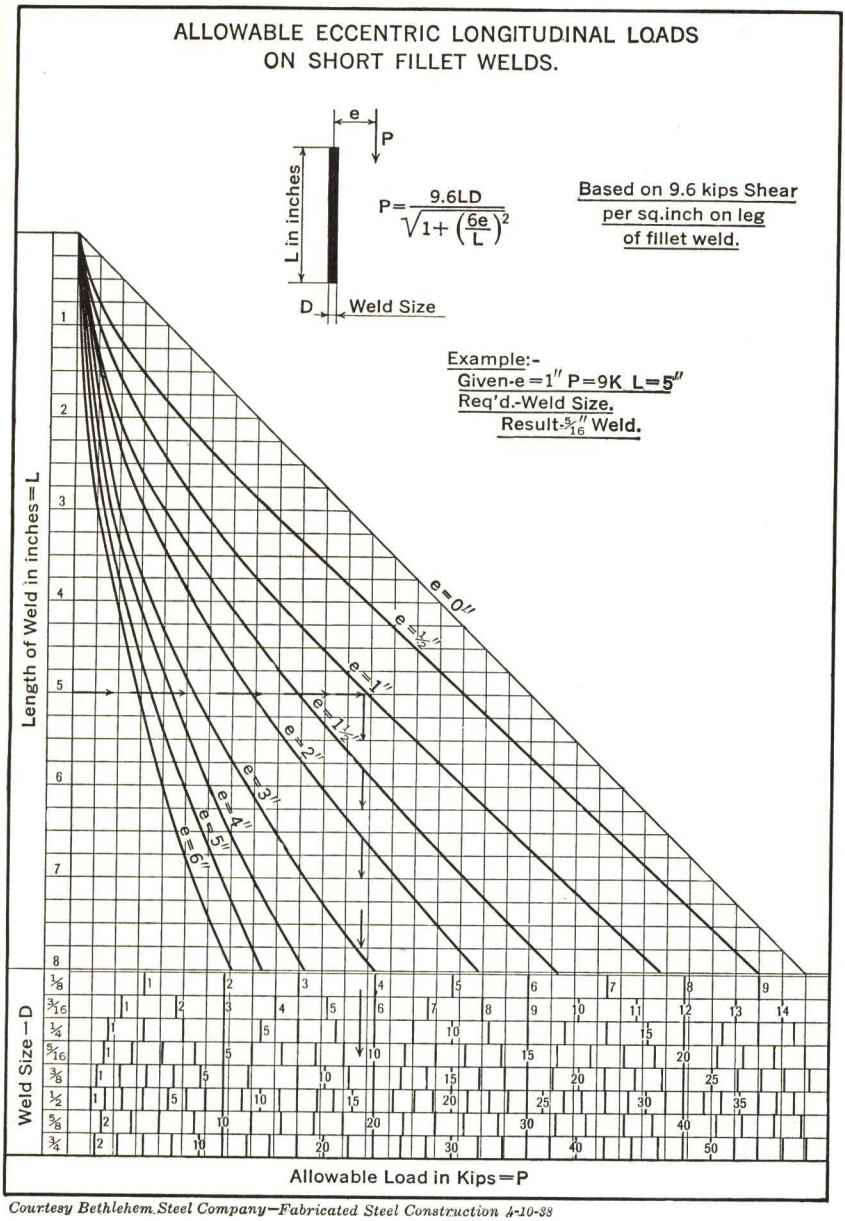

Courtesy Bethlehem Steel Company—Fabricated Steel Construction 4-10-38

CHART NO. 2

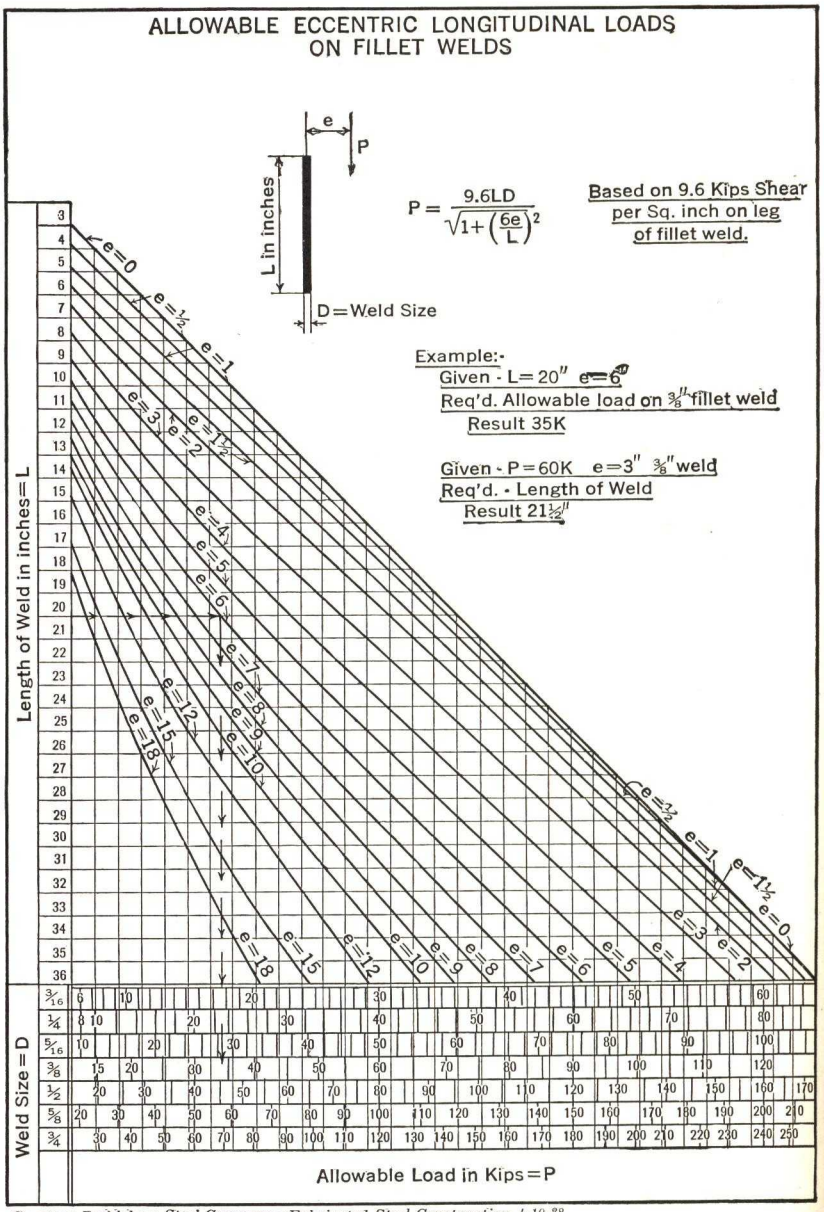

Courtesy Bethlehem Steel Company—Fabricated Steel Construction 4-10-38

CHART NO. 3

ALLOWABLE LOADS ON STIFFENED SEATS

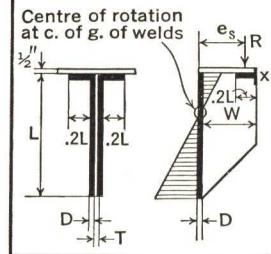

$$R = \frac{23.04DL^2}{\sqrt{L^2+16e_s^2}}$$

$$e_s = w - \frac{a}{2}$$

$$a = \frac{R}{24t} - K$$

For Values of e_s and a
See Chart 9

Connection may be made from split beam or two plates. Thickness T should be not less than the thickness of beam web.

If seat is made from split beam, welds at x are not required.

Neutral axis assumed at c. of g. of welds and allowable load 9.6K/in² on leg of fillet weld.

Example:- Given e = 4" R = 43K
Req'd. Lengths - ⅜" Welds
Result - L = 10"
Horizontal Welds 2"

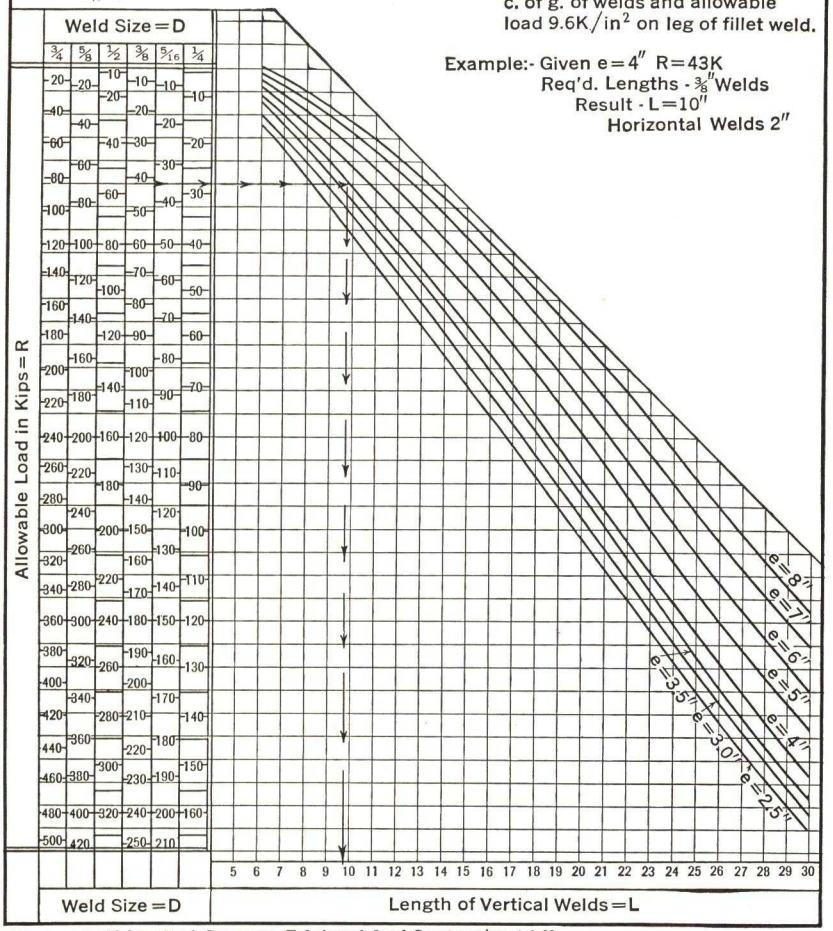

Courtesy Bethlehem Steel Company—Fabricated Steel Construction 3-3-39

CHART NO. 4

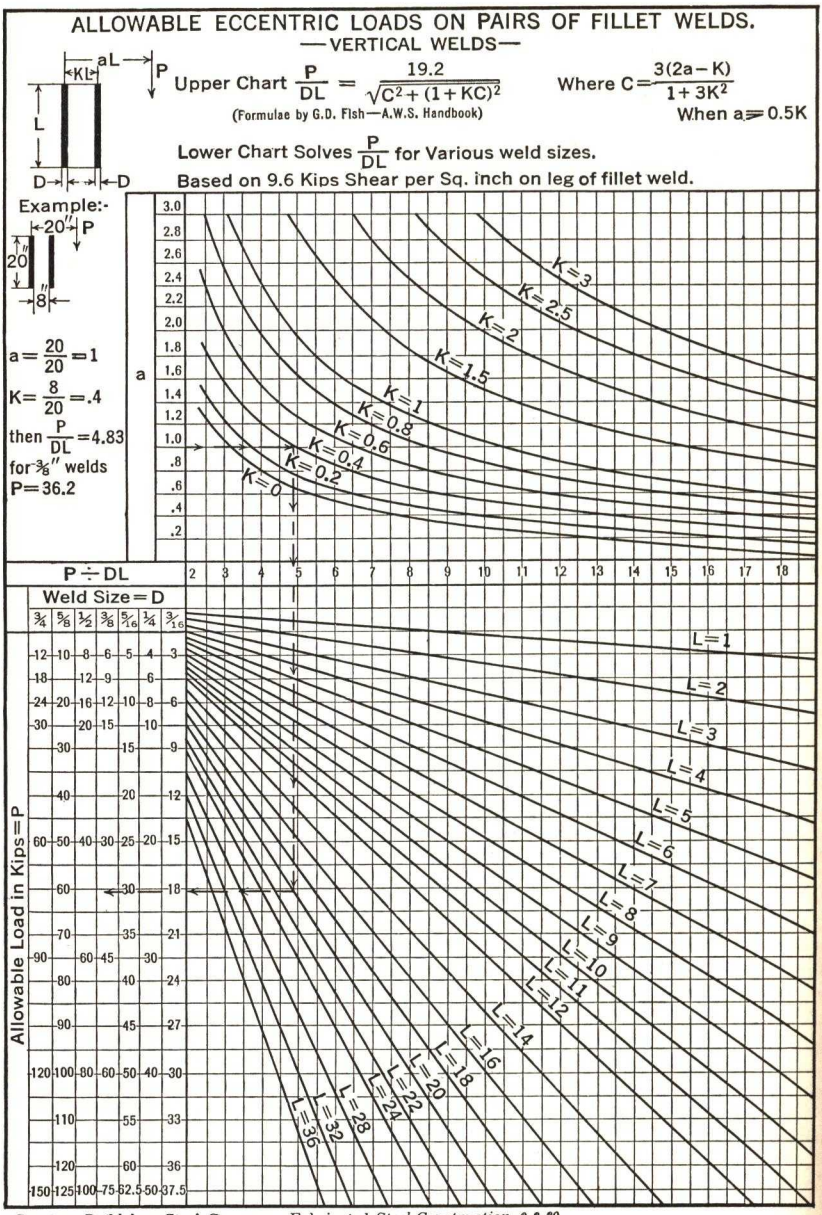

Courtesy Bethlehem Steel Company—Fabricated Steel Construction 3-3-39

CHART NO. 5

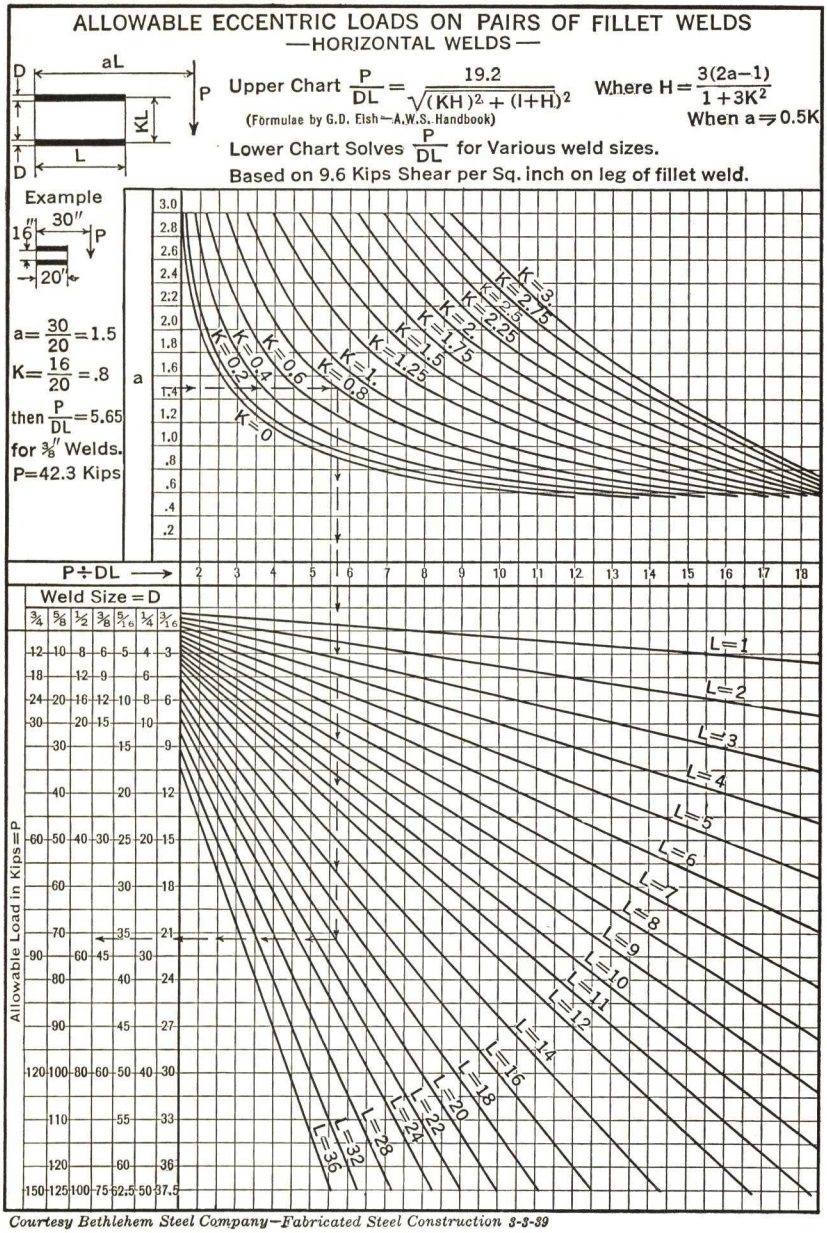

Courtesy Bethlehem Steel Company—Fabricated Steel Construction 3-3-39

CHART NO. 6

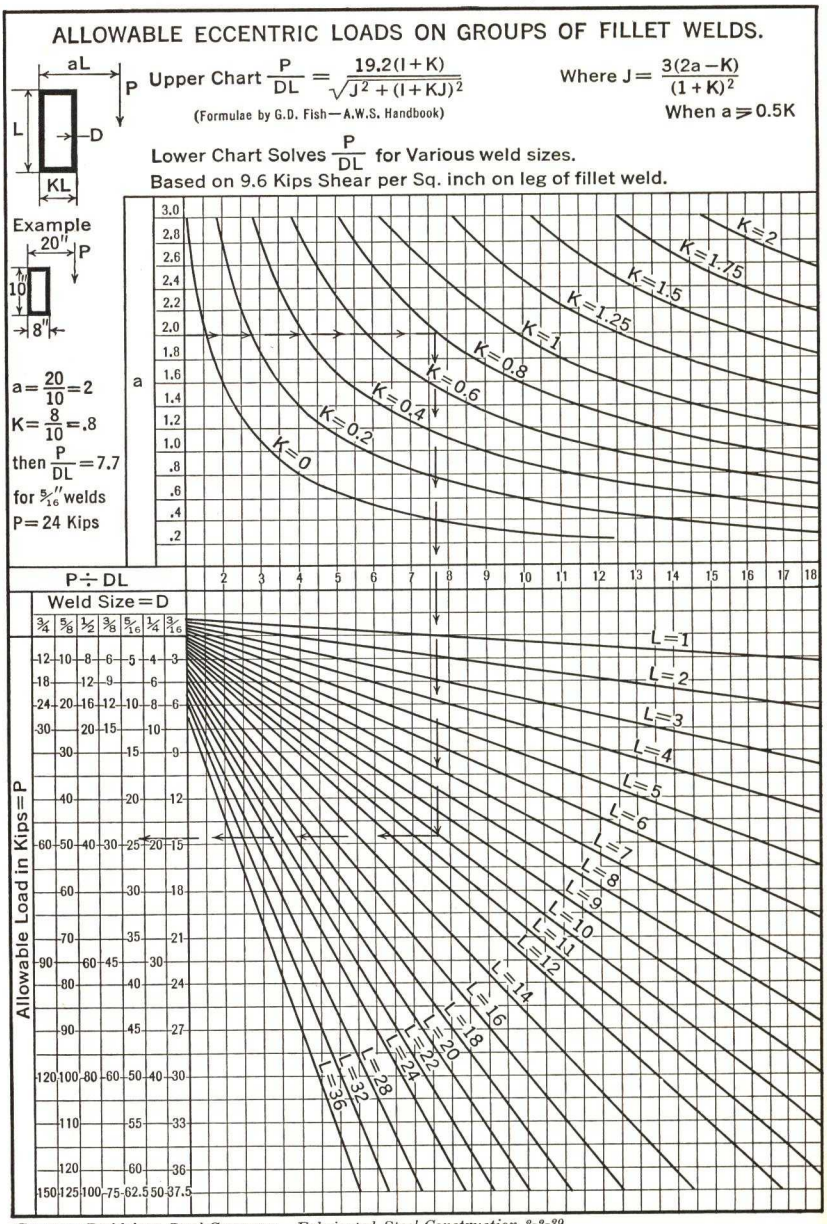

Courtesy Bethlehem Steel Company *Fabricated Steel Construction 3-3-39*

CHART NO. 7

MOMENTS IN PLATES.

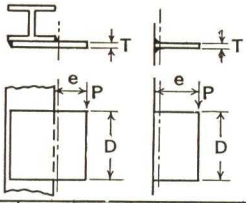

$M = Pe$

$M = \frac{STD^2}{6}$

where S = unit stress

P is given for unit stresses of 18,000 and 20,000 p.s.i.

Example:-Given - P = 50K e = 10″
If plate depth = 18″ and
unit stress 20,000 p.s.i. T = ½″

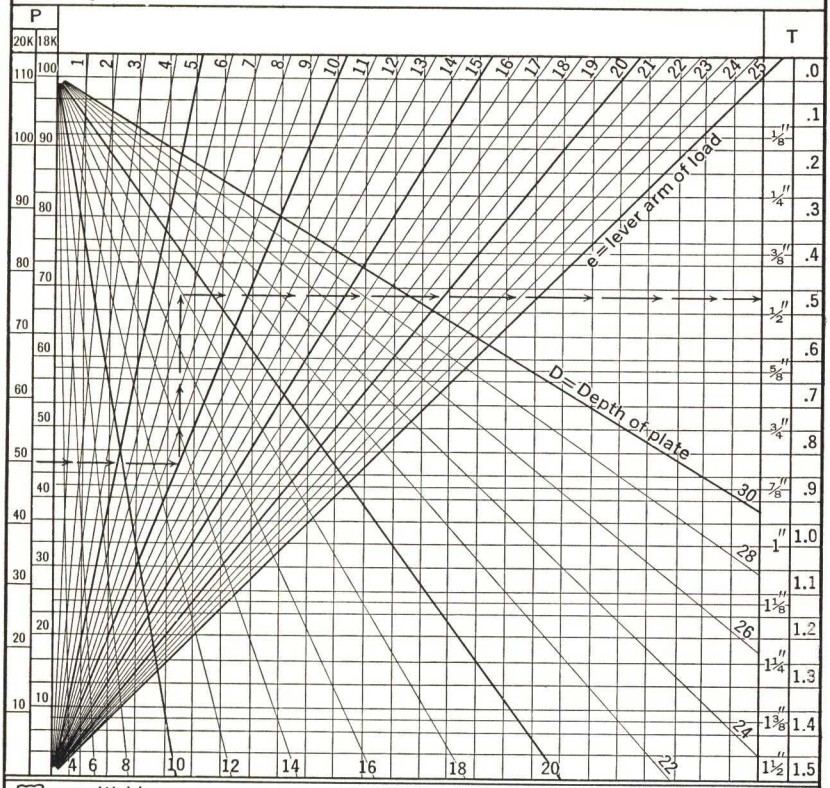

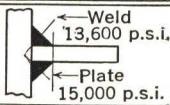

VALUES OF PAIRS OF FILLET WELDS.

For Tension in Plate — Weld Size = Plate Thickness

For Shear in Plate — See Table Below

Size of fillet welds	1/8	3/16	1/4	1/4	5/16	3/8	7/16	1/2	5/8	3/4	7/8	1	1 1/4	1 1/2
Thickness of plate	3/16	1/4	5/16	3/8	7/16	1/2	9/16	11/16	13/46	1	1 1/8	1 3/8	1 5/8	2

Courtesy Bethlehem Steel Company—Fabricated Steel Construction 3-3-39

CHART NO. 8

WEB CRIPPLING OF BEAMS ON SEATS

R = Reaction or Load
a = Length of bearing on seat to produce 24,000 psi crippling stress in beam web.

$e_f = \frac{a}{2} + \frac{1}{2}''$ for flexible seats

$e_s = w - \frac{a}{2}$ for stiffened seats

From A.I.S.C. Spec. (Revised 1936)

$a = \frac{R}{24t} - K$

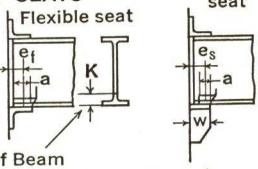

Distance from bottom of Beam to edge of fillet = K or 0 in Bethlehem Manual.

Note e_s may not be less than $\frac{w}{2}$

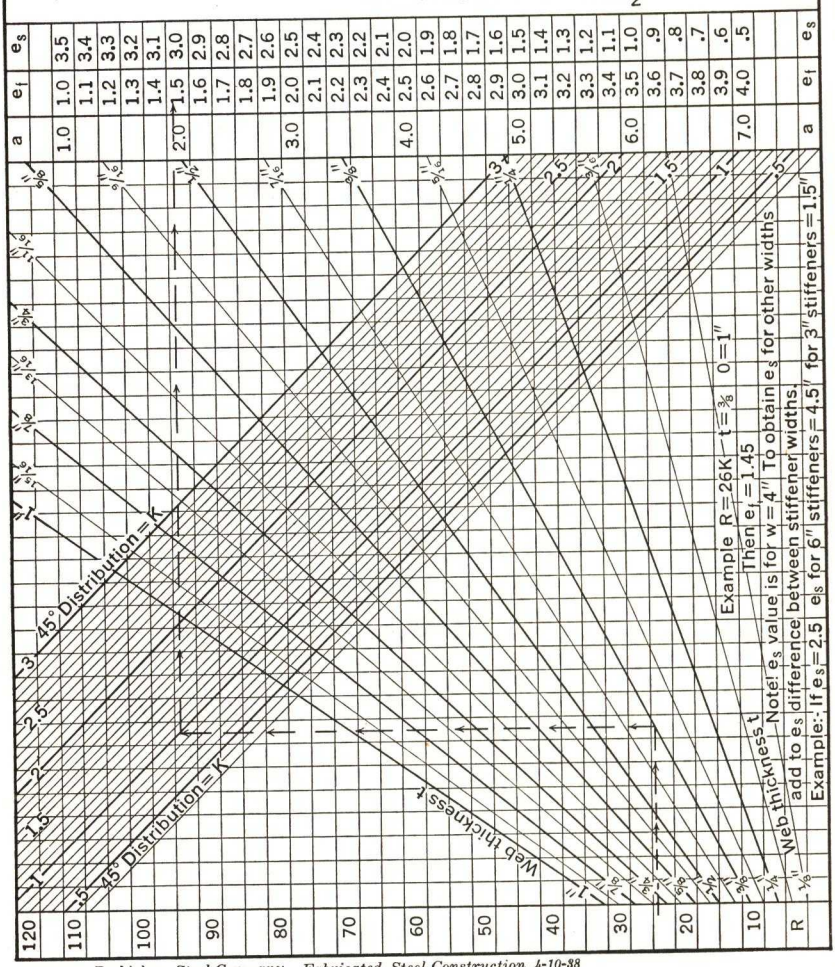

Courtesy Bethlehem Steel Company *Fabricated Steel Construction 4-10-38*

CHART NO. 9

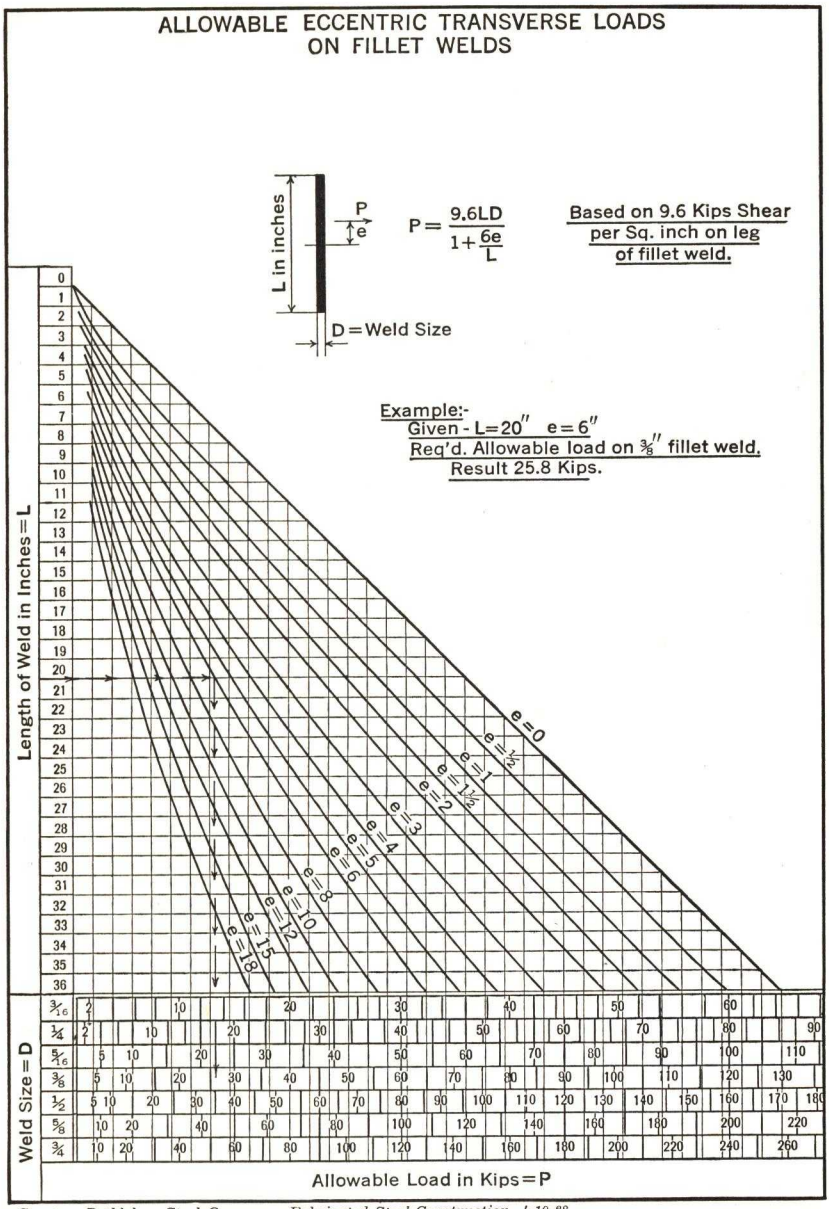

Courtesy Bethlehem Steel Company—Fabricated Steel Construction 4-10-38

CHART NO. 10

CHAPTER XII

COLUMN BASES AND FOUNDATIONS

110. General. Earth, varying in supporting power from rock to quicksand, is the foundation on which all structures rest, and in the words of Terzaghi:

> The problems of foundation engineering are as inseparably associated with the problems of structural engineering, as is the shadow with the light, because one cannot conceive of a structure without a foundation.

In spite of the fact that man has been building structures for endless centuries, a large proportion of structural failures have been due to foundation weaknesses. Since 1930, tremendous advances have been made in both the theory and practice of foundation design, largely due to the work of Dr. Karl Terzaghi and the impetus given to the study by his writings.*

It is not the purpose of this chapter to go into the science of soil mechanics, as that subject is well covered by numerous recent articles and several textbooks,† but a brief discussion will be given of some of the problems arising, and methods of design presented for the footings above the subsoil.

111. Exploration of Foundation Site. An architect or engineer seldom should proceed with the foundation design without an investigation of the subsoil upon which the foundation will rest. Sometimes data concerning the subsoil conditions rest on hearsay, and the lack of such investigations is excused on the grounds that the cost of the structure is too small to warrant the expense of an exploration. Exploration costs are sometimes high, but the information obtained

* "The Science of Foundations — Its Present and Future," by Dr. Karl Terzaghi, *Trans. Am. Soc. Civil Engrs.*, Vol. 93, 1929, p. 270.

† *Soil Mechanics,* by D. P. Krynine.

Soil Mechanics and Foundations, by Fred L. Plummer and Stanley M. Dore.

Applied Soil Mechanics, by W. S. Housel.

Building Construction, Second Edition, by W. C. Huntington.

Design of Masonry Structures, by C. C. Williams.

A Selected Bibliography on Soil Mechanics, prepared by the Committee of the Soil Mechanics and Foundation Division, American Society of Civil Engineers. Published as a manual by the Society, 1940.

may prevent future costly repairs or even the collapse of the structure.

One of the oldest methods of exploration is the *test pit,* and for shallow depths it is superior to all others. The test pit exposes the soil for close scrutiny. Samples may be secured and tested, and, if desired, static load tests for determining the bearing capacity may be made. For greater depths the cost may be excessive, especially if water is encountered.

Some information as to the depth to solid strata, the presence of soft layers of soil, and the general characteristics of the subsoil may be obtained by driving small steel rods, by means of a sledge or otherwise, and noting the penetration per blow at various depths. The interpretation of such data requires an investigator of considerable experience and skill, as the "personal factor" entering into the work is very great. The Engineering Experiment Station of the Ohio State University, in cooperation with the Ohio Department of Highways, has built a machine consisting of a small pile hammer and sectional drive rods for this purpose.* This machine has been in use by the Ohio Highway Department for some time, and considerable skill in correlating test results with performance in actual structures has been developed.

Wash borings have been widely used but frequently are unreliable. The method consists of driving a well casing and bailing or washing out the material with a stream of water under pressure. The material washed out is then examined and classified by its appearance and feel. The material obtained gives little indication of its undisturbed condition. Some information may be gained from the resistance of the casing to driving. Partially undisturbed samples may be obtained by using the wash boring method to clean the casing, then driving a smaller pipe into the soil at the bottom and recovering a sample of the soil. This method gives satisfactory samples if the soil is of such a character that it will remain in the sampler when it is withdrawn.

Core borings are made by use of a rotating bit which cores out a sample and removes it for inspection and tests. This method is used in rock and dense clay. The drill may be a diamond drill, shot drill, or steel tooth cutter.

112. Safe Bearing Loads. The determination of the safe bearing capacity of a soil has been largely a matter of experience, performance of existing buildings built on the same soil strata, and static loading

* "The Predetermination of Piling Requirements for Bridge Foundations," by K. V. Taylor, C. T. Morris, and J. R. Burkey, *Bulletin* 90, Engineering Experiment Station, Ohio State University.

tests. The exploration methods indicated in the preceding article enable an experienced engineer to compare one site with another, and disclose the presence of highly compressible strata or the depth to rock or a firm subsoil. These data assist in determining the safe bearing capacity. Building codes and specifications usually list safe allowable foundation loads for different types of soils. They are based on past experience and general practice but make no allowance for the extremely variable character of the soil in an area. Blind use of them is dangerous.

Static loading tests to determine the bearing capacity of a soil are usually reliable, but should be carried out and interpreted according to sound engineering principles.* Loading tests made upon a single small known area are not sufficient to establish a relation between resistance provided by shear on the perimeter and direct compression on the base of the footing. In making static loading tests several different bearing areas should be used in order to establish the perimeter-area relationship.

113. Settlement. Settlement is usually present in some degree in all structures unless founded upon rock. If settlement is present, it is desirable that it be uniform over the entire structure. Unequal settlement from footing to footing results in the cracking of walls and plaster and may seriously modify the computed stresses throughout the structure. The elimination of this differential settlement is dependent upon the proper proportioning of the footing areas to the permanent loads they have to carry and the recognition of the variable character of the subsoil over the building site.

Settlement is due to the consolidation of the underlying material and to the structural failure of the subsoil in shear. The approximate amount and rate of settlement are predictable by making certain load and laboratory tests on undisturbed samples of the soil.

Tests and observations have shown that clay and silty soils having a high percentage of voids have been the worst offenders from the standpoint of settlement. These deposits may occur at a considerable depth below the foundation and still contribute greatly to the settlement. Since any soil strata some distance below the surface have usually undergone consolidation due to the weight of the overburden, it is evident that a unit foundation load equal to that produced by the original overburden should maintain this stable condition. In fact

* "A Practical Method for the Selection of Foundations," by W. S. Housel, *Engineering Research Bulletin* 13, University of Michigan, 1929.

this is a procedure often used in assigning a safe bearing power to a highly compressible soil.*

114. Proportioning Footing Areas. The object of all foundation design is to provide safe bearing pressures for the maximum loads, and to maintain equal settlements throughout the structure. All dead and live loads eventually reach the column footings and are distributed to the soil below. It will be remembered that in computing the column loads the live load per unit of floor area was reduced by certain prescribed amounts from the top floor downward (see Art. 4). This procedure is intended to yield the maximum live load to be carried by any lower-story column and by its footing, but it is not probable that this maximum load will be applied to the footing continuously for any great length of time. In determining the least permissible area for a footing, the maximum probable total load should be used. But in proportioning the *relative footing* areas, the probable loads *continuously present* should be used, because temporary loads contribute little to the ultimate settlement, and the footing areas must be so proportioned that their settlements are equal. The amount of live load continuously present must be estimated from the contemplated use of the structure.

In proportioning the footings, it is not necessary to consider the direct loads due to wind unless the dead load is not sufficient to overcome any tendency to uplift.

In an office building a live load of not more than 10 lb per sq ft need be taken into account in proportioning the footings. In warehouses or buildings in which heavy loads are to be continuously present, these should be added to the dead load in calculating foundation areas. The center of the footing area should coincide with the resultant pressure. Otherwise the footing will settle unequally and tend to rotate.

115. Column Bases. When column loads are heavy and the column bending moments are not excessive, column bases are usually made of steel slabs 2 to 8 in. thick and of sufficient size to distribute the load over the top of the footing without exceeding the permissible bearing pressure. The distribution of stresses in such a base plate is indeterminate. Figure 179 shows such a base slab.

According to the handbook of the American Institute of Steel Construction it is safe to assume the load from the column to be delivered to the base slab as uniformly distributed over a rectangle whose dimen-

* See account of foundation designs for the New England Mutual Life Insurance Building in Boston, Mass., and the Telephone Building in Albany, N. Y.

"Building on Soft Clay," *Eng. News-Record,* Nov. 23, 1939.

Soil Mechanics, by D. P. Krynine, p. 223.

sions are $0.95d$ by $0.80b$, in which d is the depth of the column section and b is the width of the flange. The outside dimensions of the slab should be such that the projections in each direction beyond the rectangle above described are approximately equal. The upward pressure, p, from the footing is assumed to be uniform. These dimensions are shown in Fig. 179.

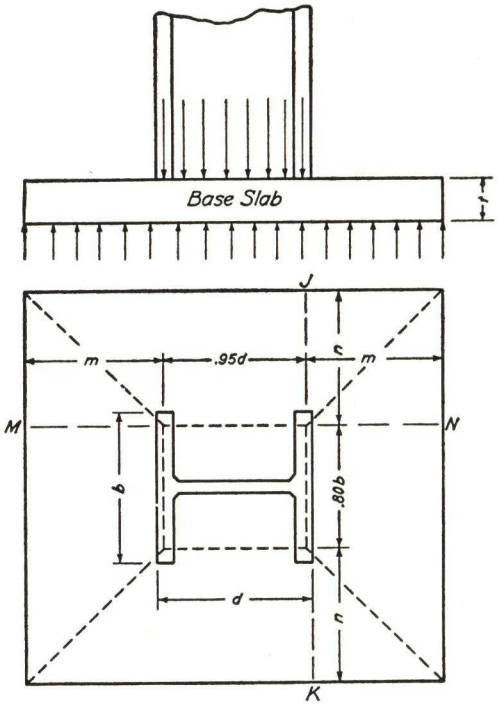

Fig. 179

Tests made at the University of Illinois* on concrete base slabs indicate that the moments of the pressures exerted on the trapezoids shown dotted in Fig. 179 about the edges of the central rectangle are

$$M = (0.4bm^2 + 0.6m^3)p, \quad \text{for section } JK$$

or

$$M = (0.475dn^2 + 0.6n^3)p, \quad \text{for section } MN$$

The effective widths of these sections, to be used in calculating the fiber stresses, may be taken as

$$b' = 0.8b + n + t, \quad \text{for } JK$$

* *Bulletin* 67, University of Illinois Engineering Experiment Station.

and

$$d' = 0.95d + m + t, \quad \text{for } MN$$

Let us assume that the lower story column in Fig. 179 is a 14 in H 300 lb., that the maximum total load on the column is 1387 kips, and that the permissible unit pressure on the foundation is 600 lb per sq in. Then the required size of the base slab will be

$$A = \frac{1387}{0.6} = 2312 \text{ sq in.}$$

$$b = 16.18 \text{ in.} \qquad 0.8b = 12.94 \text{ in.}$$

$$d = 17.0 \text{ in.} \qquad 0.95d = 16.15 \text{ in.}$$

Rolled steel slabs for bearing plates come in widths varying by 4 in., from 16 in. to 56 in. A slab 48 in. × 50 in., with the long dimension parallel to the column web, will give 2400 sq in. bearing area.

For the section MN,

$$p = 578 \text{ psi} \qquad m = 16.92 \qquad n = 17.53 \text{ in.}$$

$$M = 3{,}303{,}300 \text{ in.-lb} \qquad d' = 38 \text{ in. (approx.)}$$

For an allowed unit stress of 20,000 psi on steel,

$$t^2 = \frac{6 \times 3{,}303{,}300}{20{,}000 \times 38} = 26.1 \qquad t = 5.11 \text{ in.}$$

For the section JK,

$$M = 2{,}750{,}700 \text{ in.-lb} \qquad b' = 35.5 \text{ in.}$$

$$t^2 = \frac{6 \times 2{,}750{,}700}{20{,}000 \times 35.5} = 23.3, \quad \text{which is less than required for section } MN$$

A slab 48 in. × 5½ in. × 50 in. planed to 5⅛ in. may be used.

The lower end of the column shaft should be carefully milled and the top of the base slab planed, to insure an even bearing. Extreme care is necessary in setting the base slabs on the footing, to insure a level top surface. A slight deviation of the top surface from a horizontal plane will cause a large bending moment at the base of the column.*

116. Grillage Foundations. Let us assume that Fig. 98 represents the floor plan of a building some 25 stories high. The maximum dead and live load stresses in the lower story columns are shown in kips in the table on page 258.

* See "Dead Load Stresses in the Columns of a Tall Building," by Clyde T. Morris, *Bulletin* 40, Engineering Experiment Station, Ohio State University.

	Cols. *A*, *D*, *H*, *I*, and *J*	Cols. *B*, *C*, *E*, and *G*	Col. *F*
Dead load	858.0	1207.0	1584.0
Maximum live load	90.0	180.0	270.0
Maximum total load	948.0	1387.0	1854.0
Estimated permanent live load	30.0	60.0	90.0
Total permanent load	888.0	1267.0	1674.0

Suppose also that explorations and tests at the site disclose a uniform sandy clay formation which, it is estimated, will safely carry a bearing load of 4 tons per sq ft.

In this first grillage design it is assumed further that the lot is of sufficient size so that isolated footings may be used without encroachment on a neighboring lot.

Column *F* carries the highest proportion of live load, and its footing area should be determined first. Then the other footing areas must be made proportional to the respective permanent loads. A rough estimate of the weight of the footings should be included in these loads. These may be corrected later when the design is completed.

Column F,

$$\begin{aligned} \text{Maximum load} &= 1854.0 \text{ kips} \\ \text{Estimated weight of footing} &= \underline{80.0} \text{ "} \\ & \ 1934.0 \text{ "} \end{aligned}$$

$$\text{Required footing area} = \frac{1934.0}{8} = 242 \text{ sq ft}$$

$$\text{A footing } 15.5 \text{ ft} \times 16.0 \text{ ft} = 248 \text{ sq ft}$$

$$\begin{aligned} \text{Permanent load} &= 1674.0 \text{ kips} \\ \text{Footing} &= \underline{80.0} \text{ "} \\ & \ 1754.0 \text{ "} \end{aligned}$$

$$\text{Permanent unit pressure} = \frac{1754.0}{248} = 7070 \text{ lb per sq ft}$$

Columns A, D, H, I, and J,

$$\text{Required area} = \frac{888 + 50}{7070} = 133 \text{ sq ft}$$

A footing 11.5 ft × 11.5 ft = 132.25 sq ft will answer.

Columns B, C, E, and G,

$$\text{Required area} = \frac{1267 + 60}{7070} = 188 \text{ sq ft}$$

A footing 13.5 ft × 14 ft = 189 sq ft will answer.

In designing the footing for column F, a three-layer grillage, approximately square, composed of steel beams bolted together with separators and filled with concrete as shown in Fig. 180 will be used. As the column base will rest directly on the steel beams, the bearing unit stress on the concrete is not critical.

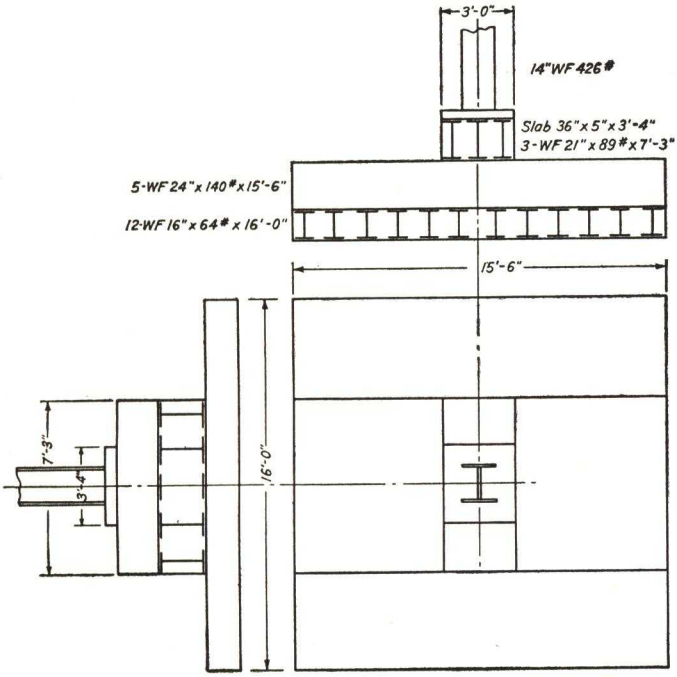

Fig. 180

For the upper tier, three beams 21 in. WF × 89 lb will be used. To cover these three beams when they are spaced far enough apart to permit placing of the concrete, a base slab at least 36 in. wide will be necessary. A column base 36 in. × 40 in. will be used.

Column Base. Referring to Fig. 179,

$b = 16.7$ in. $\quad d = 18.7$ in. $\quad m = 11.12$ in. $\quad n = 11.32$ in.

$$p = \frac{1854}{36 \times 40} = 1288 \text{ psi}$$

For section MN,

$$\text{Mom.} = 2{,}586{,}600 \text{ in.-lb} \qquad d' = 34 \text{ in. (approx.)}$$

$$t^2 = \frac{6 \times 2{,}586{,}600}{20{,}000 \times 34} = 22.8 \qquad t = 4.78 \text{ in.}$$

For section JK,

$$\text{Mom.} = 2{,}126{,}500 \text{ in.-lb} \qquad b' = 29.5 \text{ in. (approx.)}$$

$$t^2 = \frac{2{,}126{,}500 \times 6}{20{,}000 \times 29.5} = 21.6$$

Use base slab 36 in. × 5½ in. × 3 ft, 4 in., planed to 5 in.

Weight = 2040 lb

Upper Tier of Beams,

$$\text{Load} = 1854 + 2.0 = 1856 \text{ kips}$$

Using three beams 21 in. WF × 89 lb, as suggested above, the permissible length, L, for these beams may be found.

$$\text{Mom.} = \frac{P}{2}\left(\frac{L}{4} - \frac{40}{4}\right) = 232(L - 40) = \text{Sec. mod.} \times 20$$

$$3 \times 182.8 \times 20 = 10{,}968 = 232L - 9280$$

Solving, $L = 87$ in.

Weight of upper tier, steel and concrete = 6700 lb

Middle Tier Beams,

$$\text{Load} = 1856 + 6.7 = 1862.7 \text{ kips}$$

Length of beams = 15.5 ft (Five beams can be covered by the 7 ft, 3 in. length of the upper tier.)

$$\text{Mom.} = \frac{1862.7}{2}\left(\frac{186}{4} - \frac{36}{4}\right) = 34{,}925 \text{ in.-kips}$$

$$\text{Reqd. sec. mod.} = \frac{34{,}925}{20} = 1746.2 \text{ in.}^3$$

Use five beams, 24 in. WF 140 lb. Sec. mod. = 1793 in.^{3}

Weight of middle tier, steel and concrete = 39,200 lb

Lower Tier Beams,

$$\text{Load} = 1862.7 + 39.2 = 1901.9 \text{ kips}$$

Length of beams = 16.0 ft

$$\text{Mom.} = \frac{1901.9}{2}\left(\frac{192}{4} - \frac{87}{4}\right) = 24{,}960 \text{ in.-kips}$$

$$\text{Reqd. sec. mod.} = \frac{24{,}960}{20} = 1248.0 \text{ in.}^3$$

Use 12 beams, 16 in. WF × 64 lb. Sec. mod. = 1250 in.^{3}

Weight of lower tier, steel and concrete = 55,100 lb

$$\text{Max. pressure on soil} = \frac{1901.9 + 55.1}{248} = 7890 \text{ lb per sq ft}$$

117. Combined Footings. In this article, let it be assumed that the lot line in Fig. 98 falls 2.0 ft east of the center lines of columns *I* and *J*, and that it is not permissible for the column footings to extend east of this line. The north-south dimension of the footing is not restricted. It is then necessary that footings *F* and *J* be combined.

The combined *permanent* load on these two columns is 1674.0 + 888.0 = 2562.0 kips. By proportioning the total area of the combined footing to that required for footing *F*, as the permanent loads on the columns are to each other, the required area of the combined footing will be

$$A_{FJ} = \frac{2562 \times 248}{1674} = 380 \text{ sq ft}$$

The center of gravity of this area must coincide with the center of gravity of the loads on *F* and *J*. This will fall 14.38 ft from column *J*. These conditions may be met by a rectangular footing 11 ft, 7½ in. wide × 32 ft, 9 in. long, extending from the east lot line to a point 8 ft, 9 in. west of column *F*.

In designing the footing beams, the maximum loads must be used.

Column *F* = 1854 kips
Column *J* = 948 "

Preliminary calculations show that the main beams, 32 ft, 9 in. long, will require a total width of about 5 ft, 4 in. in order that the concrete may be properly placed between them. The column loads must be distributed over this width. Figures 181 and 182 show the designs for these column bases. The calculations are simple and similar to those shown for the grillage in the preceding article.

Column F Base. Referring to Figs. 179 and 181,

b = 16.7 in. d = 18.7 in. m = 9.12 in. n = 7.32 in.

$$p = \frac{1854}{28 \times 36} = 1839 \text{ psi}$$

$$M_{JK} = [6.68 \times (9.12)^2 + 0.6(9.12)^3] \times 1839 = 1{,}858{,}700 \text{ in.-lb}$$

$$M_{MN} = [8.88 \times (7.32)^2 + 0.6(7.32)^3] \times 1839 = 1{,}307{,}700 \text{ in.-lb}$$

$$b' = 25.5 \text{ in. (approx.) for } JK \qquad t^2 = \frac{6 \times 1858.7}{20 \times 25.5} = 21.87$$

$$t = 4.68 \text{ in.}$$

Use base slab 28 in. × 5½ in. × 3 ft, planed to 5 in.

Weight = 1430 lb

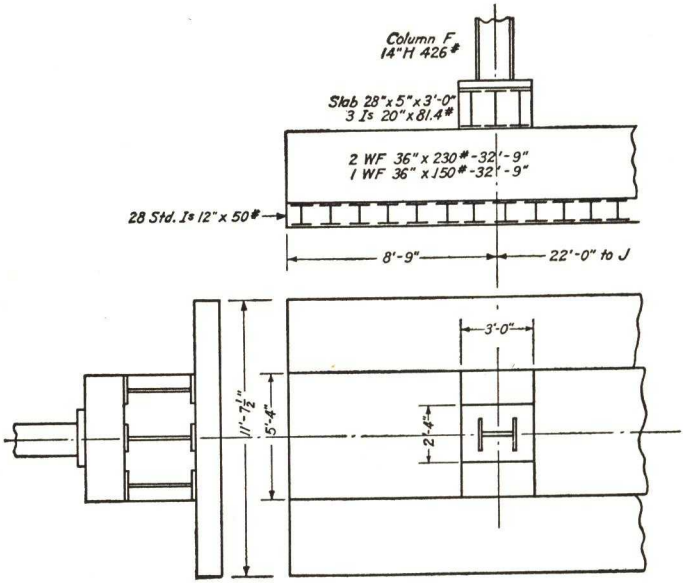

Fig. 181

Upper Tier Beams,

Load = 1854 + 1.4 = 1855.4 kips

Length = 5 ft, 4 in. $\qquad M = \frac{1855.4}{2}\left(\frac{64}{4} - \frac{28}{4}\right) = 8349.2$ in.-kips

Reqd. sec. mod. $= \frac{8349.2}{20.0} = 417.46$ in.^{3}

Use 3 std. I's, 20 in. × 81.4 lb. Sec. mod. = 439.8 in.^{3}

Weight of upper tier = 4670 lb

Column J Base. Referring to Figs. 179 and 182,

$$b = 15.8 \text{ in.} \qquad d = 15.75 \text{ in.} \qquad m = 4.52 \text{ in.} \qquad n = 5.68 \text{ in.}$$

$$p = \frac{948}{24 \times 24} = 1646 \text{ psi}$$

$$M_{JK} = [6.32(4.52)^2 + 0.6(4.52)^3] \times 1646 = 303{,}700 \text{ in.-lb}$$
$$M_{MN} = [7.48(5.68)^2 + 0.6(5.68)^3] \times 1646 = 578{,}200 \text{ in.-lb}$$

$$d' = 22.5 \text{ in. (approx.) for } MN \qquad t^2 = \frac{6 \times 578.2}{20 \times 23.5} = 7.38$$

$$t = 2.72 \text{ in.}$$

Use base slab 24 in. × 3½ in. × 2 ft, planed to 3 in.

Weight = 490 lb

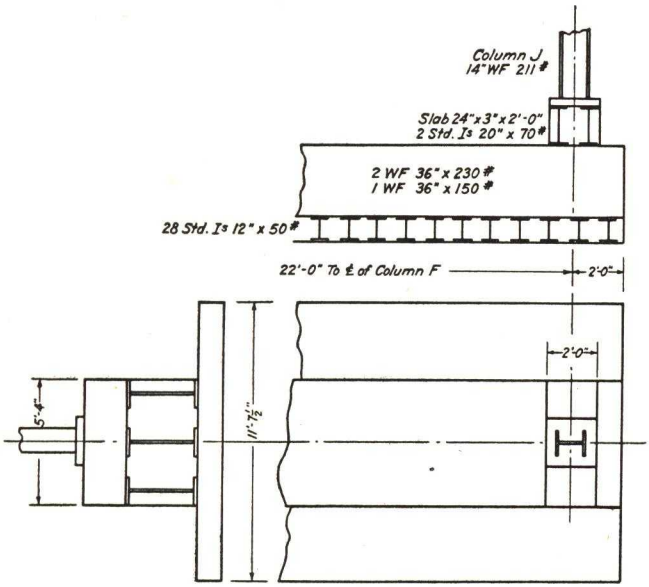

Fig. 182

Upper Tier Beams,

$$\text{Load} = 948 + 0.5 = 948.5 \text{ kips}$$

$$\text{Length} = 5 \text{ ft, } 4 \text{ in.} \qquad M = \frac{948.5}{2}\left(\frac{64}{4} - \frac{24}{4}\right) = 4742.5 \text{ in.-kips}$$

$$\text{Reqd. sec. mod.} = \frac{4742.5}{20} = 237.1 \text{ in.}^3$$

Use 2 Std. I's, 20 in. × 70 lb. Sec. mod. = 242.8 in.^{3}
Weight = 3030 lb

Main Beams. See Fig. 183,

The loads are, at F = 1855.4 + 4.6 = 1860.0 kips
at J = 948.5 + 3.0 = 951.5 kips

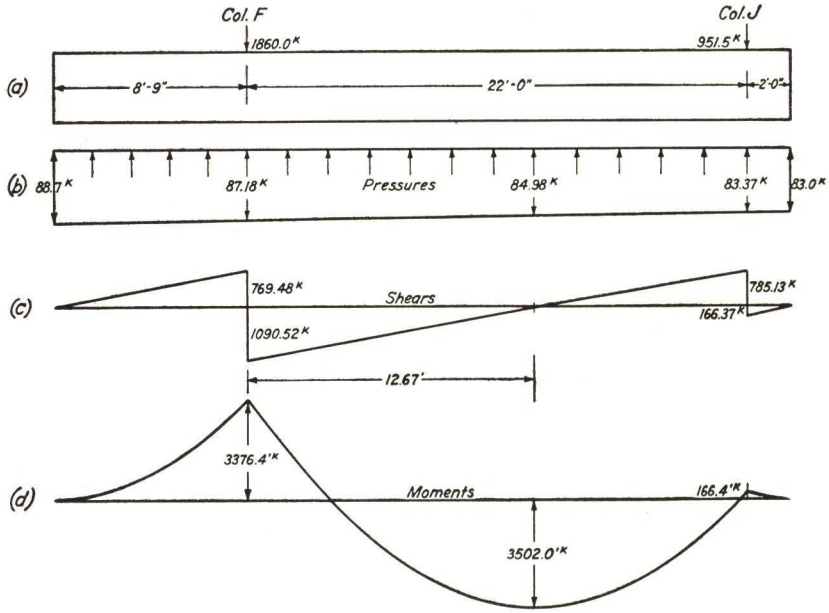

Fig. 183

For these loads the pressure on the soil will not be uniform, as it will be for the permanent loads, but will be as shown in Fig. 183(b), 88.7 kips per lineal ft at the west end and 83.0 kips per lineal ft at the east end. Note that the lines in the shear diagram, Fig. 183(c), are not straight. The shear is zero and the moment a maximum 12.67 ft from column F. The moments are shown in Fig. 183(d). For the maximum moment the required section modulus is $\dfrac{3502.0 \times 12}{20} = 2101.3$ in.^{3}

2 WF beams, 36 in. × 230 lb, + 1 WF beam, 36 in. × 150 lb.
Sec. mod. = 2174 in.^{3}

Weight = 87,600 lb

Lower Tier Beams,

$$\text{Load} = 1860.0 + 951.5 + 87.6 = 2899.1 \text{ kips}$$

This load produces a unit pressure of 91,380 lb per lineal ft at the west end and 85,680 lb per ft at the east end. The maximum bending moment for the last foot on the lower tier beams at the west end is

$$M = \frac{91{,}380}{2}\left(\frac{11.62}{4} - \frac{5.33}{4}\right) = 71{,}850 \text{ ft-lb}$$

$$\text{Reqd. sec. mod. per ft} = \frac{71{,}850 \times 12}{20{,}000} = 43.11 \text{ in.}^3$$

Use 28 Std. *I*'s, 12 in. × 50 lb, spaced about 14 in. c. to c.

$$\text{Weight of lower tier} = 65{,}000 \text{ lb}$$

The maximum pressure on the soil is

$$\frac{91{,}380}{11.62} + \frac{65{,}000}{11.62 \times 32.75} = 8030 \text{ lb per sq ft at the west end}$$

INDEX

Aerocrete, 22
Aircraft hangar, 168, 169
Allocation of wind force, 79, 109, 172
American Institute of Steel Construction specifications, 173, 200
American Welding Society, code of, 231
Analysis, of rigid frames — horizontal forces, 81
— vertical forces, 47
of wind bracing, 81
Area moments, 54
Asymmetry, 120
Austin Company, 165, 166, 170, 171

Baier, Julius, wind pressures, 5
Balcony framing, 31
Bar joists, 21
Batho, C., and J. F. Baker, connection restraint, 221
Beam lines, 222
Beams and girders, 26
balcony, 31
composite, 27
continuity, 33
deflections, 30
encased in concrete, 27
reduced working stresses, 26
supporting two-way slabs, 19
web stresses, 26
Bearing loads on soil, 253
Bell Aircraft Corporation, 170, 171
Bending and compression, 42
Bent deflection, 102
Bethlehem Steel Company, design charts, 242 to 251
Booes, George, Jr., 28
Borings, core, 253
wash, 253
Boyd, James E., 39, 51, 54
Bracing systems, industrial buildings, 168
tier buildings, 80
Brackets, 213
column, 193
Brick arch floors, 9
Building frames, 74
analysis of wind stresses, 78, 120
deflection and vibration, 93
due to wind, 102
industrial buildings, 162
stiffness of wind bents, 109
tier buildings, 74, 78 to 129
tower building, 108
unsymmetrical, 120
vibrations, 93
Burt, H. J., 85
Butt welds, 201, 231, 232

Cables, 137, 153
ice loads, 143, 155
impact, 157
initial tension, 137
length, 139
sag, 137
temperature effect, 156
tower guys, 137
transmission lines, 153
wind loads, 140, 155
working stresses, 137
Cantilever method of wind stress calculation, 88, 104
equivalent base, 90
Carry over factor, 61, 70
Columns, 39
allowable loads, 40
base plates, 192, 199, 255, 259
bending and compression, 42
brackets, 193
crane, 179, 184
design, 44, 97, 105, 108, 179, 184, 187
eccentrically loaded, 39
effective lengths, 41
end conditions, 41
formulas, 40

Columns, formulas, Euler's, 39
parabolic, 40
Rankine, 40
straight line, 40
live loads, 2
maximum moments, 74, 76
roof, 187
schedules, 44
splices, 197
wind stresses, 85 to 119, 180
Combination slabs, 14
Combined footings, 261
Combined direct and torsional shear, 209
Combined shear and bending, 206
Committee on wind bracing, 4, 78, 82, 94, 104, 108
Composite beams, 27
Concentrated loads on slabs, 23
Connections, restraint, 216, 217, 219
rigidity of, 218
semi-rigid welded, 221
Continuity, 33
Continuous beams and frames, 47 to 77, 84
welded, 216
Continuous floor slabs, 18
Core borings, 253
Corrugated iron arch floors, 9
Crane columns, 179, 184
Crane runway, 174
Creskoff, J. J., 8
Cross, Hardy, moment distribution, 61, 82
stress distribution, 78

Dead loads, 3
Deflections, 34 to 38
balcony, 30
beams, 35
bents, 102
cables, 137, 155
calculations, 36
effect of plastic flow, 32
girders of variable section, 37
moment areas, 54
radio towers, 142
reinforced concrete beams, 32
strain-energy method, 34
trusses, 34, 36
Deflections, wind bents, 102
Design charts, welding, 242 to 251
Details of buildings, 193 to 199
Dewell, H. D., 8
Diaphragms, 180
Domes for two-way slabs, 20
Dryden, H. L., and George C. Hill, 4, 130

Earthquake effects, 7
Eccentric loads, columns, 39, 44
from floors, 42
welded joints, 206
Effective width of slabs, 24
Elastic line, integration of, 51
Elastic requirements, 95
End conditions, effect on column strength, 41
End stiffeners, 178
End welds, 205
Euler's formula for columns, 39

Fatigue of welded joints, 232
Fireproof floors, 9 to 25
Fixed end moments, 62, 68
Flange riveting, 178
Flange welding, 228
Flat slab construction, 22
Fleming, R., 1, 3, 4, 85, 88
Floor distortion, 128
Floor framing, 28
economy, 30
Floors, fireproof, 9 to 25
bar joists, 21
brick arch, 9
combination slabs, 14
concrete slab, 13
corrugated iron arch, 9
early types, 9
girderless, 22
hollow tile, 10
safe loads, 14
Johnson system, 15
loads, 1, 23
pan construction, 16
two-way slabs, 17
Florida hurricane, 5
Foundations, 252 to 265
combined footings, 261
exploration methods, 252

Foundations, footing areas, 255
grillage, 257
loading tests, 254
proportioning areas, 255, 258
safe loads, 253
settlement, 254
test pits, 253
Fowler, Charles Evan, 2
Framing of industrial buildings, 162
Free standing towers, 131

Gibson and Wake, tests of welded connections, 205
Girderless floors, 22
Girders, balcony, 31
crane runway, 174
crane thrust, 177
deflection, 30, 35
end stiffeners, 178
flange riveting, 178
flange welding, 228
supporting two-way slabs, 19
web stiffeners, 26, 229
welded, 225
Godfrey, H. J., web buckling, 26
Goldberg Method, 82
Goodrich, C. M., cable sag, 156
Green, N. B., 8
Grillage foundations, 257
Grinter, L. E., 26, 120
Guyed towers, 132, 140
guys, 137
guys at two levels, 148
the mast, 144

Hangar, aircraft, 169
Heller, A. H., 39
Hollow tile arch floors, 10
Housel, W. S., 252, 254
Hovey, Otis E., 26
Huntington, W. C., 252
Hydraulic Press Mfg. Co., 170

Ice loads, 2
guys, 143
radio towers, 131
transmission lines, 155, 157
Impact, crane runways, 174
transmission lines, 157
Indeterminacy, degrees of, 47
Industrial buildings, 162 to 199
bracing systems, 168
column spacings, 167
columns, 179, 180, 184, 187
crane runways, 174
design problem, 173
framing types, 162
monitor, 163
rigid frames, 164
structural details, 187, 193 to 199
trusses, 188
wind stresses, 168, 171, 180 to 187
Integration of elastic lines, 51
International Stacey Corp., 134, 136

Jensen, Cyril D., 214
Jensen and Lotz, 225
Johnson, Bryan, and Turneaure, 139
Johnson system of floors, 15
Johnston and Diets, 217, 222
Johnston and Mount, 217

Knee-braced wind bents, 83, 92
K-percentage method, 82
Krynine, D. P., 252, 255

Large, George E., 12, 56, 67, 95, 120, 129
Lateral systems, 168
Lawson, Heath, 212
Loading tests, foundations, 253
Loads, concentrated, 23
corridors, 1
dead, 3
earthquake, 7
floor, 1, 23
ice, 2, 143, 155, 157
office, 1
roof, 2
snow, 2
stair, 1
wind, 4 to 7, 130, 168
Lower story design, 115
Lyse, Inge, and Gibson, 220
Lyse, Inge, and Godfrey, 26
Lyse, Inge, and Schreiner, 212

Maney, G. A., 56
Mast, stresses in, 144
Maximum moments in building frames, 74

Maximum moments in building frames, live loading for, 75
Mill buildings, 162
  design, 173
Modulus of elasticity, of cables, 141
  effect on column strength, 41
Moment areas, 54
Moment distribution, 61 to 74
  for bents, 64
  carry over factor, 62, 70
  roof frame, 71
  side sway, 64
  sign convention, 64
  stiffness factor, 62, 71
  variable moment of inertia, 67
Moore, H. F., 26
Morgan, N. D., 61
Mount, E. H., 217
Multi-storied frame, 74

National Fireproofing Co., 15, 16
Neutral axis, composite beams, 27
  wind bents, 91

Ohio State University, Engineering Experiment Station, 12, 23, 27, 32, 41, 56, 67, 88, 97
Oil well derricks, 130

Pan construction floors, 15
Peck, R. E., 69
Plastic flow of concrete, 33
Plate girders, welded, 225
Plummer, Fred L., 252
Portal method of wind stress calculation, 82, 84, 96
Pressures, foundations, 253
  wind, 4
Priest, H. M., 215

Radio towers, 130 to 153
  cable sag, 137
  deflection, 137, 139, 142, 151
  free standing, 131
  guyed, 132, 140, 148
  mast design, 144
  stresses in guys, 137
  wind direction for maximum stresses, 137
  WGBF, 134
Radio towers, WWL, 136
Rathbun, J. Charles, 103, 120
Reinforced concrete beam deflections, 30
Reinforced concrete slabs, 13, 17, 28
Restraint, analysis including, 221
  economy of, 216
  effect on moments, 216, 221
  top and bottom angles, 219
  welded connections, 216
Richart, F. E., 56, 74
Rigid frames, 47 to 77, 82 to 119, 164, 221 to 225
  analysis of, 47 to 77
  general assumptions, 49, 85, 88
  indeterminacy, 47
  industrial buildings, 164
  integration methods, 51
  moment distribution, 61 to 74
  multi-storied, 74
  side sway, 64
  slope deflection, 56
  welded connections, 195, 216, 219
Roof, sawtooth, 163, 169
Roof columns, 180, 184, 187
  crane thrust, 184
  design, 187
  wind load, 180
Roof frame, 71
Roof loads, 2
Roof monitors, 163
Roof trusses, design, 188
Ross, A. Ward, 95
Runways, crane, 174

Sag rods, 194
Sawtooth roofs, 163, 169
Schneider, C. C., 1
Seat angles, 211
  stiffened, 213
Semi-rigid connections, 217
Semi-rigid frames, 221
Settlement of foundations, 254
Shear, on beams, 26, 178
  on rivets, 178
  on welds, 200, 203
Shedd, T. C., 207
Side sway, 64
Slabs, combination, 14
  concentrated loads, 23

Slabs, continuous, 18
economy, 28
effective width, 24
flat, 22
hollow tile and concrete, 14, 20
Johnson system, 15
pan construction, 15
reinforced concrete, 13
two-way, 17
Slope deflection, 56 to 60
semi-rigid frames, 221 to 225
sign convention, 57
Smith, Albert, 85, 120, 122
Smith, James O., 236
Snow loads, 2
Soil resistance, 253
Spurr, H. V., 94, 104, 108
Statical indeterminacy, 47
Stecker, William W., on welded joints, 205
Stiffened seats, 213
Stiffeners, concentrated loads, 178, 230
end, 178, 230
plate girder webs, 26, 229
Stiffness factor, 62, 71
St. Louis tornado, 5
Structural details, 193 to 199, 213, 238
Sutherland and Reese, 13
Suyehiro, Kyoji, 8

Taylor, Thompson, and Smulski, 13, 23, 27, 31
Temperature effect on cable sag, 156
Terzaghi, Karl, 252
Test pits, 253
Tie rods in floors, 9
Timoshenko, S., 26
Torsion on building frames, 120 to 129
transmission towers, 159
welds, 209
Tower building, 108
Towers, radio, 130 to 153
Transmission towers, 153 to 161
loads, 157
torsional stresses, 159
Transverse bents, crane thrust, 184
industrial buildings, 162, 168
tier buildings, 78, 80, 102
wind loads, 110, 180
Truss, roof, 188 to 193
Turneaure and Maurer, 32
Turner, C. A. P., 23

Unsymmetrical bents, 91
Unsymmetrical structures, 120 to 129
Unsymmetrical towers, 160

Variable moment of inertia, 67
Vibrations, buildings, 93

Wash borings, 253
Web stiffeners, 26, 178, 229
Web stresses in beams, 26
Weiss, Camillo, 56
Welded design, 200 to 251
beam-to-column connection, 211
charts, 242 to 251
column splices, 238
continuity, 216
economy, 202
plate girders, 225
seat angles, 211 to 216
specifications, 200
Welding rods, 200
Welding symbols, 238
Welds, butt, 201, 231, 232
end, 205
fatigue, 107
fillet, 201, 203, 205, 207
intermittent, 202
minimum, 201
shear, 203
shear and bending, 206
shear and torsion, 209
Westergaard, H. M., 17
WGBF radio towers, 134
Williams, C. C., 252
Wilson, A. C., 88
Wilson, W. M., 26, 56, 61, 235
Wind bracing, 78 to 129
allocation of forces, 79
effective, 78
methods of analysis, 81
Wind bracing methods of design, cantilever, 88 to 93, 104
elastic requirements, 95
lower stories, 115 to 119
portal, 82 to 88, 96
Spurr, 104 to 115

Wind bracing types, 80
Wind forces, 4 to 7
direction for maximum effect, 131, 137
industrial buildings, 171
open frameworks, 130
suction, 5
Wind forces, transmission lines, 158
Wind velocities, 4
Witmer, F. P., *K*-percentages, 82
WWL radio towers, 136